Vanguard SYSTEMS INC.

Peel Back Force Tester
VG-35 Manual

Function & Explanation P2
Machine Overall
Machine Specification
Mainframe／LCD Operation Panel

Procedure of Measuring P11
Preparation & Measuring
Data Saving

PC link and setup P34
Data Manager Install & execution
Data transfer thru CF memory or USB

Ver. 1.0.0

http://www.vanguard.co.jp

Function & Explanation

■Machine Overview／Specification 2
■Function of Mainframe 3
■Function & Name of LCD operation Panel 5
Main Menu display／Measuring screen
Condition menu／Data menu／Environment menu

Procedure of Measurement

■Preparation 11
Power on/LCD display menu/
Measuring/Condition/
Example of Condition change/Tape setting
/Level setting of cover tape peeling
/Chart Recorder (option)
■Measurement start 26
■Data saving 29
Current data saving
Data file select
File name input

PC link

■Installation of VG-35 Data Manager 34
■VG-35 Data Manager execution 41
Data file thru USB
Data file thru CF memory
■Excel start 48

Function & Explanation

Machine overview

This machine is designed by base on JIS. EIAJ specification for peel back force measurement of taping .

Flow of operation

1)Emboss carrier tape setting to slider at start position by double sided adhesive tape and link with chart recorder if necessary.
2)Starting by pushing start button.
3)Graph will be displayed on LCD panel display.
(the Graph will be drew on chart recorder if linked)
4)Measurement will be stopped by pushing STOP button or reaching stop position.
5)Date will be saved on main memory or PC thru CF memory or USB.

Machine Specification

Environment condition

1) installation area : indoor
2)Temperature : 20～30℃
3)Humidity :30～70%
4)power : AC100V 50／60Hz
5)GND : must be connected for safety

PC environment
Windows2000／XP Japanese version
Data transfer
・Compact Flash Memory
・USB cable: USB(A)male－USB(Mini-B)female

■FUNCTION & NAME

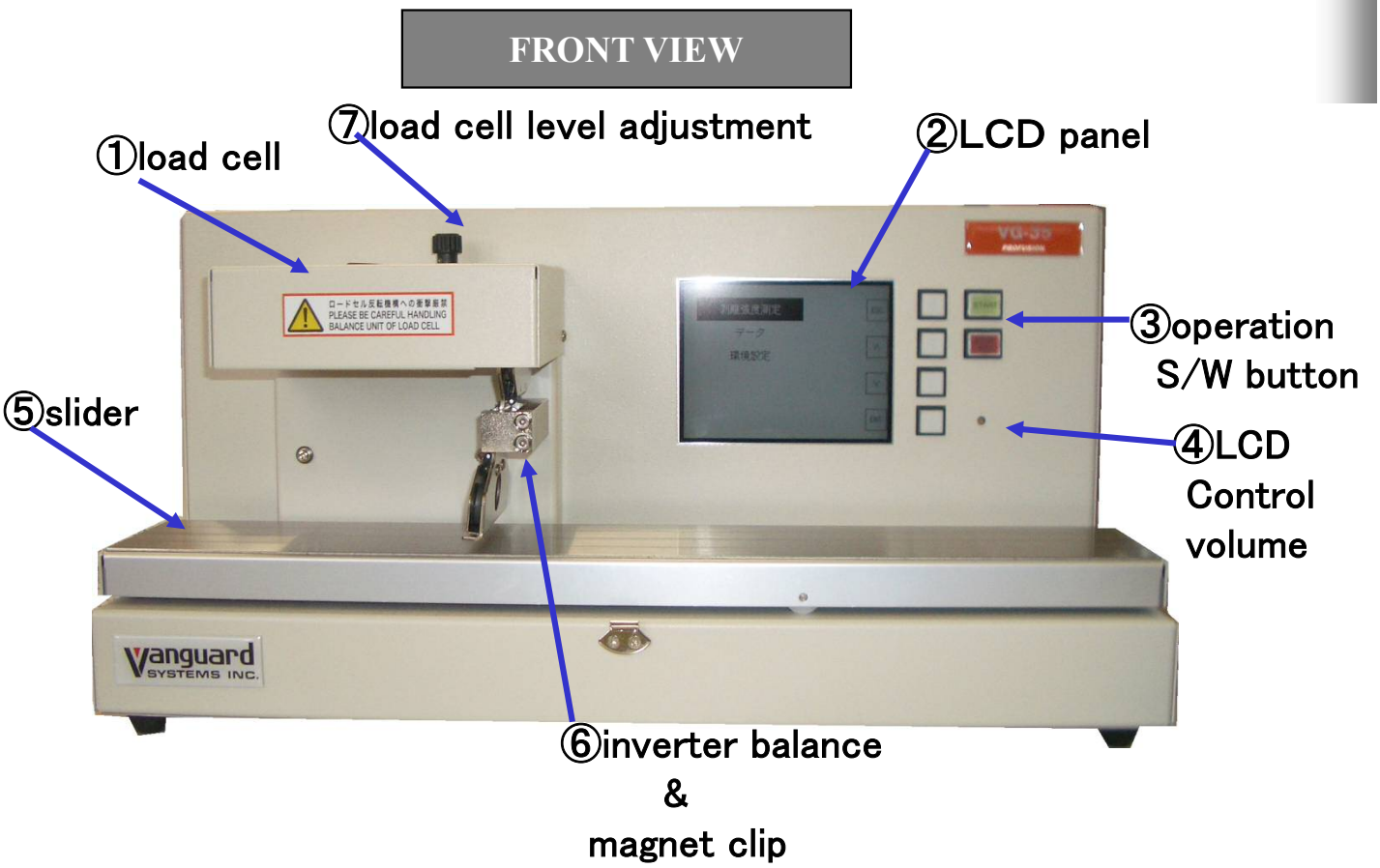

①load cell
:Converting peel back force to analog voltage。
②LCD panel
:display graph, data setting, environment setting
③Operation S/W button
:operating and function will be changed by display menu.
④LCDcontrol volume
:performing LCD brightness control
⑤slider
:for emboss tape setting to measure.
⑥inverter balance & magnet clip
:consist of invert balance for measuring and magnet clip for cover(top) tape clipping.
⑦load cell level adjustment
:adjusting for peeling level by emboss tape thickness

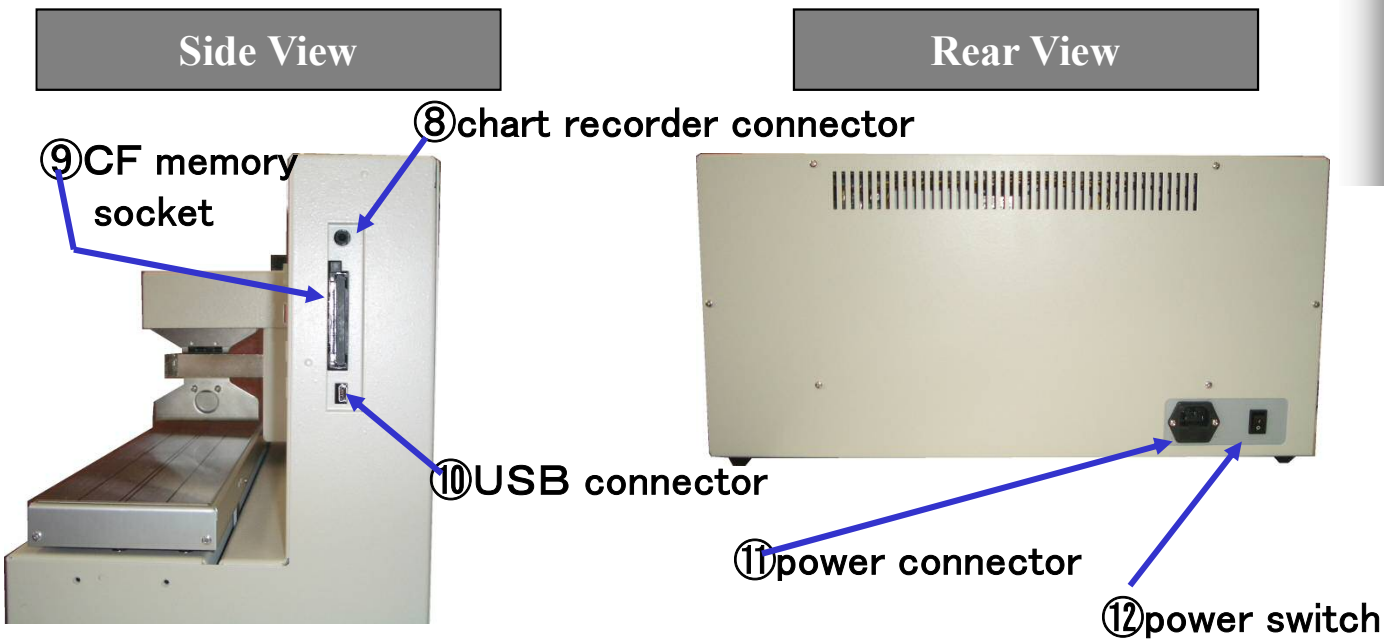

⑧charter recorder connector
: for connecting with chart recorder (option)
⑨CF memory socket
: CF memory card plug in socket for data transfer to PC.
⑩USB connector
: USB cable connector to link with PC for data transfer.
⑪power connector
: for power cable connector.
⑫power switch
: for power ON/OFF.

■Function & name of LCD operation panel

●Main menu display

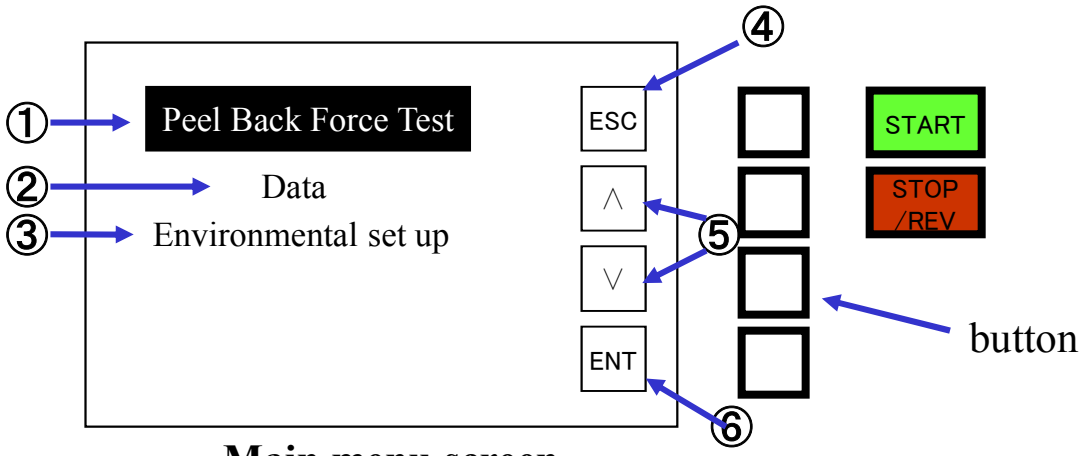

Main menu screen

①Peel Back Force Test	・・・	select to measuring screen
②Data	・・・	select to data menu screen
③Environmental set up	・・・	select to environment menu
④ESC	・・・	N/A
⑤∧∨	・・・	moving cursor for select
⑥ENT	・・・	enter for execute

●Measuring screen

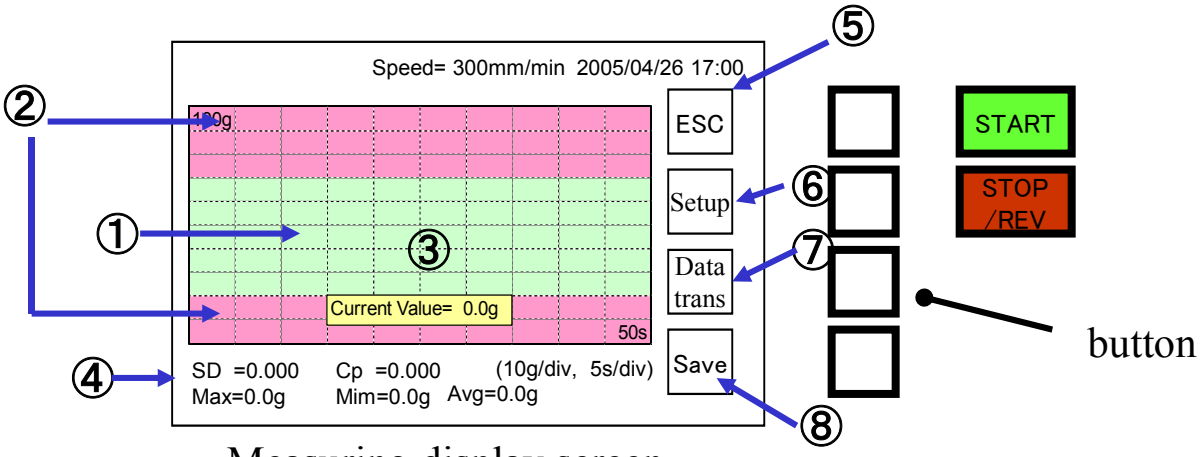

Measuring display screen

①Pass region ・・・ pass region
(can be set at setup menu)

②Fail region ・・・ fail region
(can be set at setup menu)

③Current Value ・・・ displaying current peeling force

④Other value ・・・ SD＝standard deviation
Cpk＝ production coefficient
Max＝Maximum value
Min＝minimum value
Avg＝average value

⑤ESC ・・・ move to previous menu

⑥Setup ・・・ setting measuring condition
(refer to 1-3-1 para.)

⑦Data Trans ・・・ data transfer to PC thru CF memory or USB port
(refer to para. 1-3-2)

⑧SAVE ・・・ saving the measured data to main memory.

●Setup menu

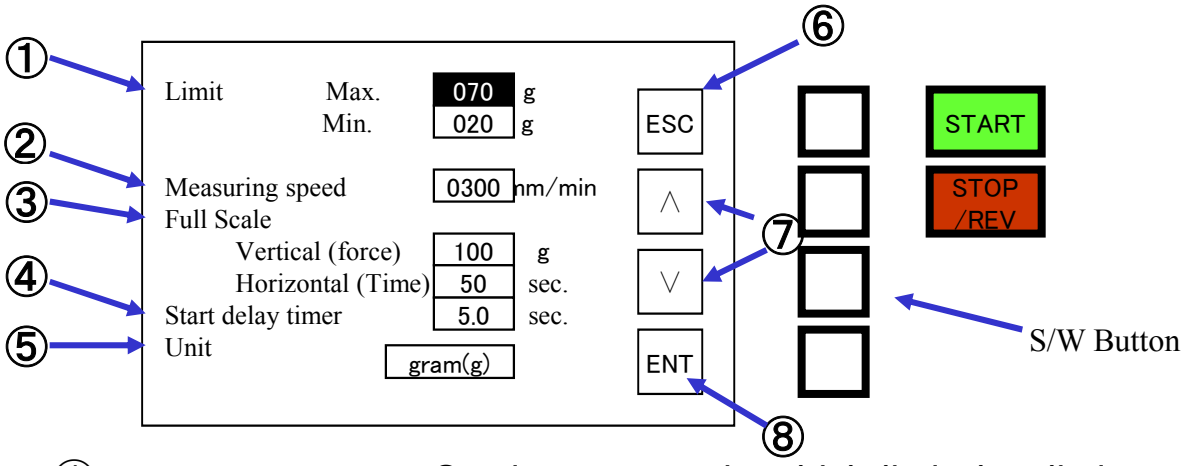

①Limit ・・・ Setting pass region: high limit, low limit
(Initial value :high limit 70g、low limit 20g)
within limit :Pass 、without limit :Fail
the Limit can be edited under blue background color after selected by cursor key.
the value can be changed as 1g step by pushing ∧∨key and setting range is 20g～ 200g.
the background color will be changed as black after pushing ENT button.

②Measuring speed ・・・ can be set as you want。
(Initial value:300mm/min)
the Speed can be edited under blue background color after selected by cursor key.
the speed can be set as 10mm/min step by pushing ∧∨key.
and setting range is 120～ 2330mm/min.

③Full scale ・・・ setting display scale of LCD panel
(Initial setting:Vertical 100g、Horizontal 50sec.)
the Speed can be edited under blue background color after selected by cursor key.
Vertical scale setting as 100g or 200g by∧∨key
Horizontal scale setting as 5,10,20,50,100,130sec.

④Start delay timer ··· Data capturing start timer after pushing START button. (Initial setting:5. 0sec)
The Timer can be set as 0.1Sec. step by pushing ∧∨key.
Setting range is 0.0 ～20.0 Sec.

⑤Unit ··· display UNIT can be set as Gram or Newton (initial setting:Gram(g))
Cursor color is changing as blue by ENT key after selected by cursor key..

⑥ESC ··· return to measuring screen
setup parameter will be saved if changed with beep sound.

②∧∨ ··· moving the cursor with up and down
also using for setup parameter changing

③ENT ··· executing for new setup parameter.
performing new parameter after changing by ∧∨ key.

●DATA menu

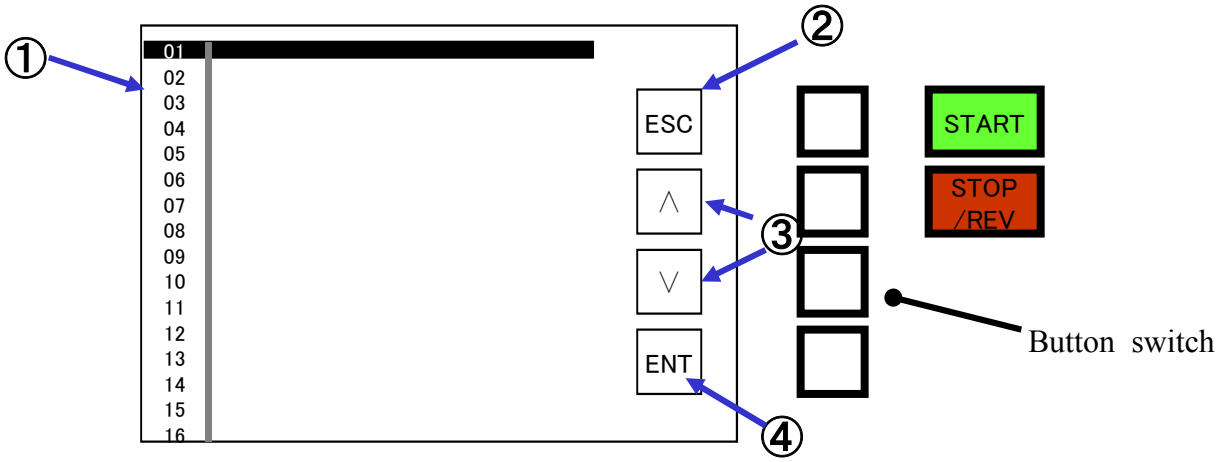

①data fileNo. ・・・ File No. for save and load.
it can save up to 16 data file.
it can be selected by ∧∨key
for save and load.

②ESC ・・・ return to previous menu.

③∧∨ ・・・ move the cursor up and down.

④ENT ・・・ executing selected file

●Environmental setup

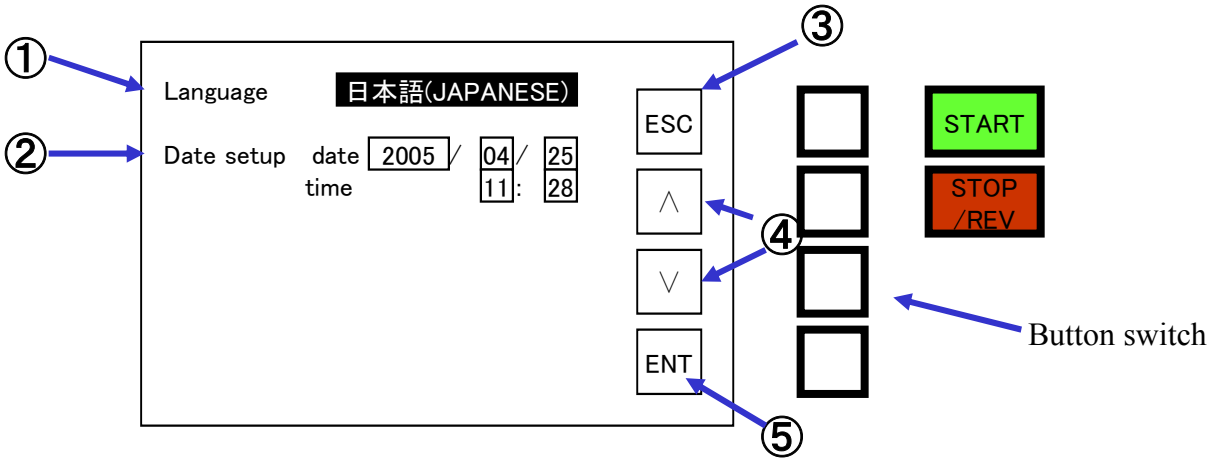

①Language ・・・ JAPANASE or ENGLISH can be selected by ∧∨ key and executing by ENT key.

②Date setup ・・・ date and time can be set by ∧∨key and fixing by ENT

③ESC ・・・ Return to main menu. It will be saved with beep sound if environmental setup is changed.

④∧∨ ・・・ Moving the cursor up and down. also it can be used for data editing.

⑤ENT ・・・ Deciding environmental setup item. Executing after editing by ∧∨ key.

Procedure of measurement

■preparation

1 Power ON

Please switch ON after confirming power cable plug-in

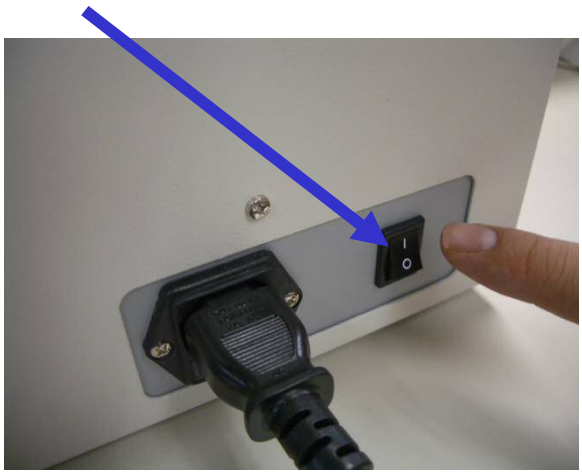

2 Displaying menu on LCD panel

PEEL BACK FORECE TESTER

VG-35

Ver.1.01

VANGUARD SYSTEMS INC

After 3 seconds･･･

Peel back force test

Data

Environmental set up

ESC

∧

∨

ENT

3 Peel back force test

push ENT key after select peel back force test

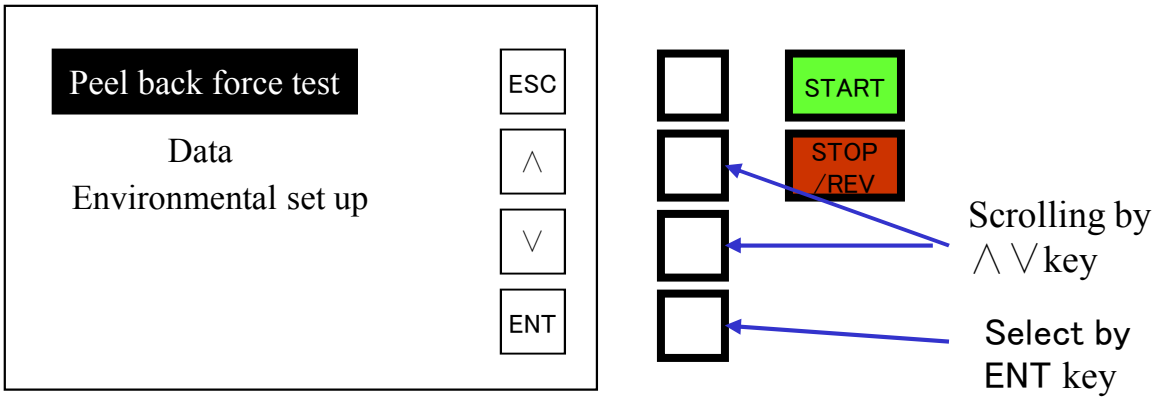

4 Set up

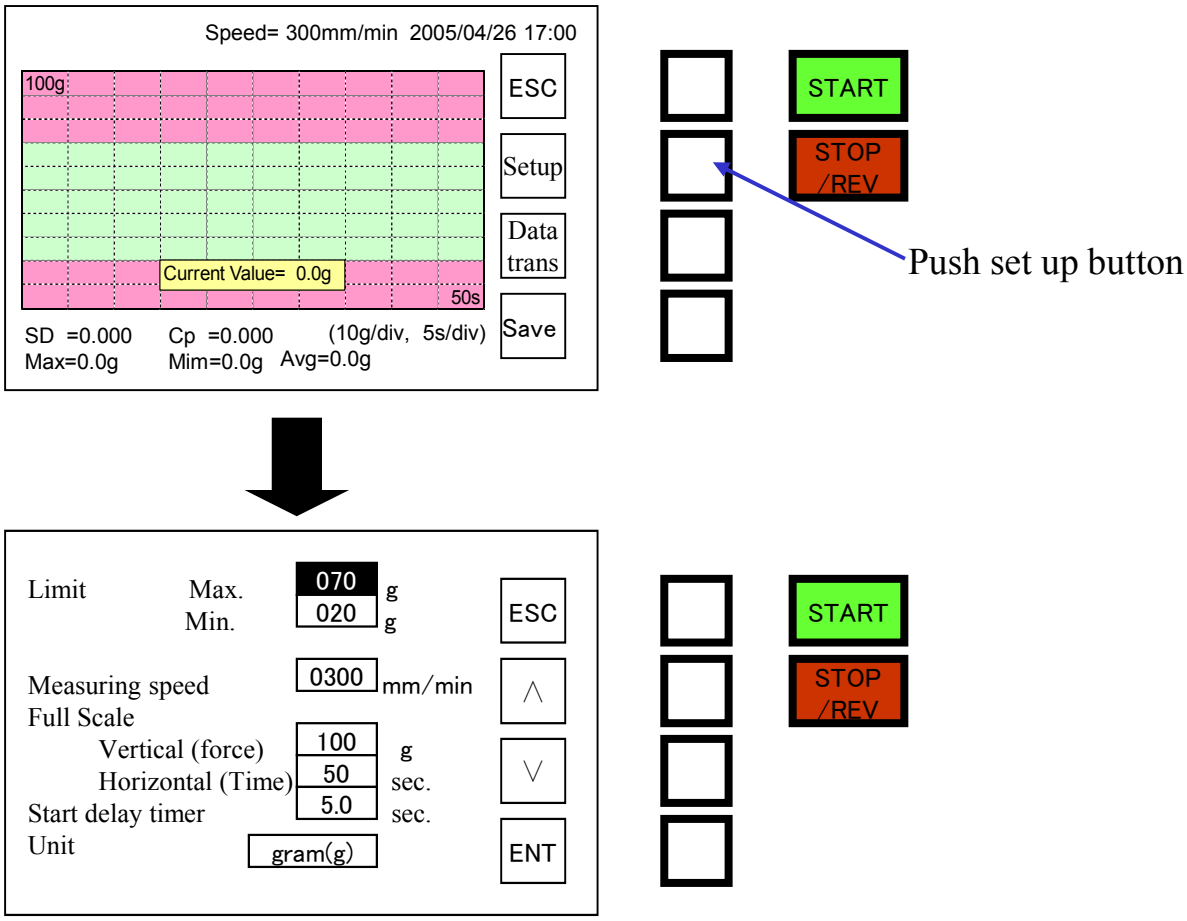

Above is initial display value。
Please return previous menu by ESC key if don`t need editing value

●Peel back force test condition set up
(ex) Editing Max. limit value

①Push ENT button after moving cursor to Max. column.

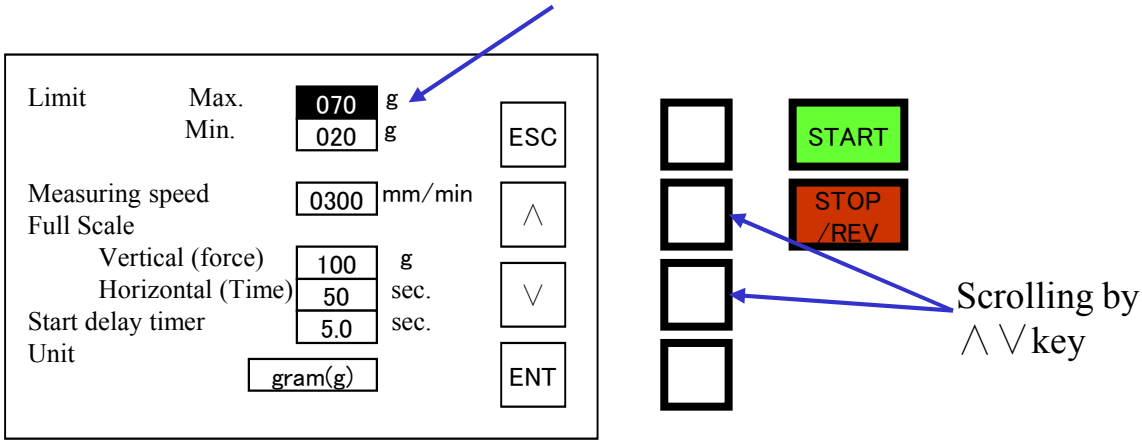

②Background color will be changed as blue by pushing ENT key。
This is enable condition of editing.

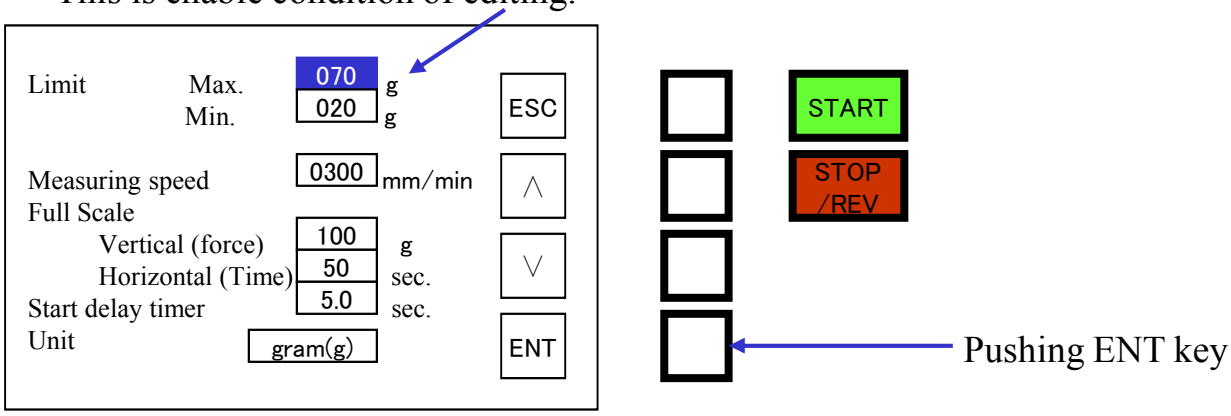

③Setting value by pushing cursor key.
※ Resolution is 1g

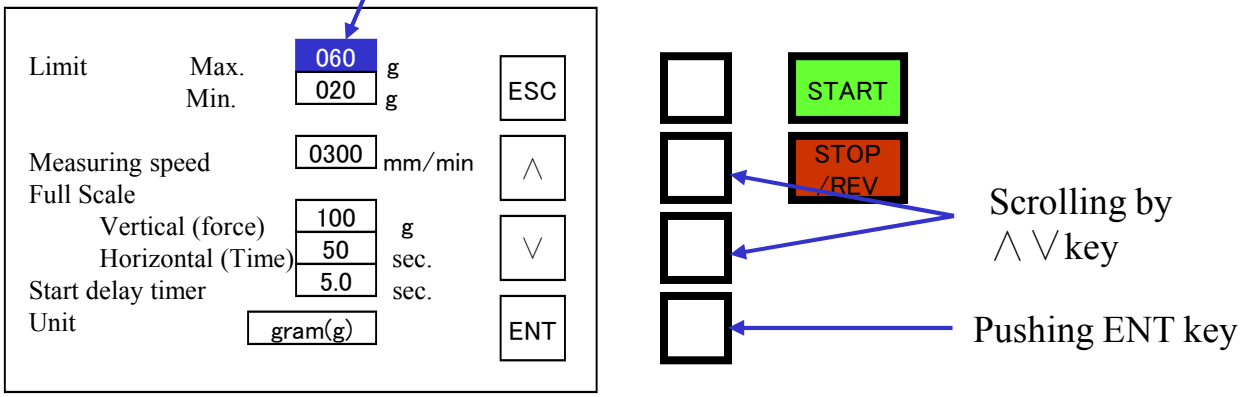

④Push ENT key after value is set then background color will be black.

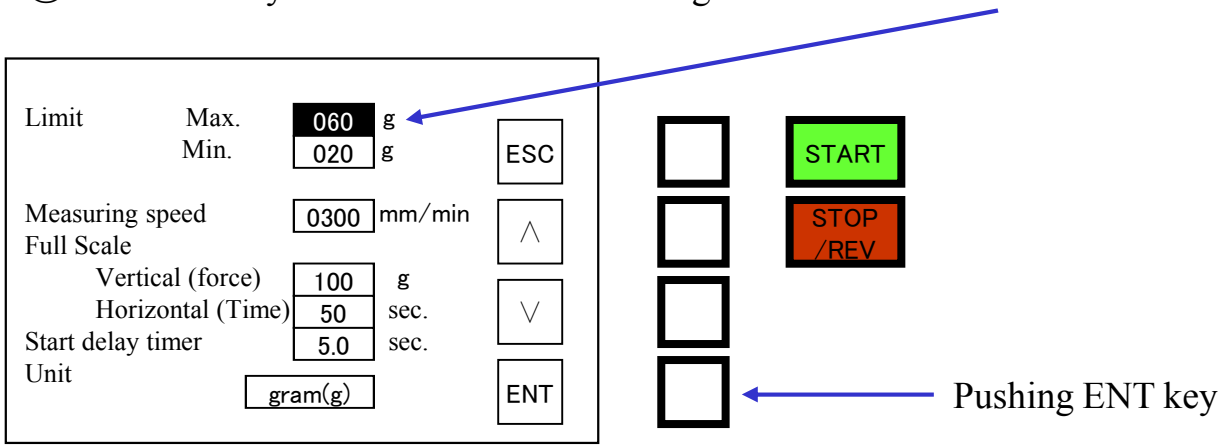

⑤Beep sound by ESC key and then saving、screen display return to measuring screen.

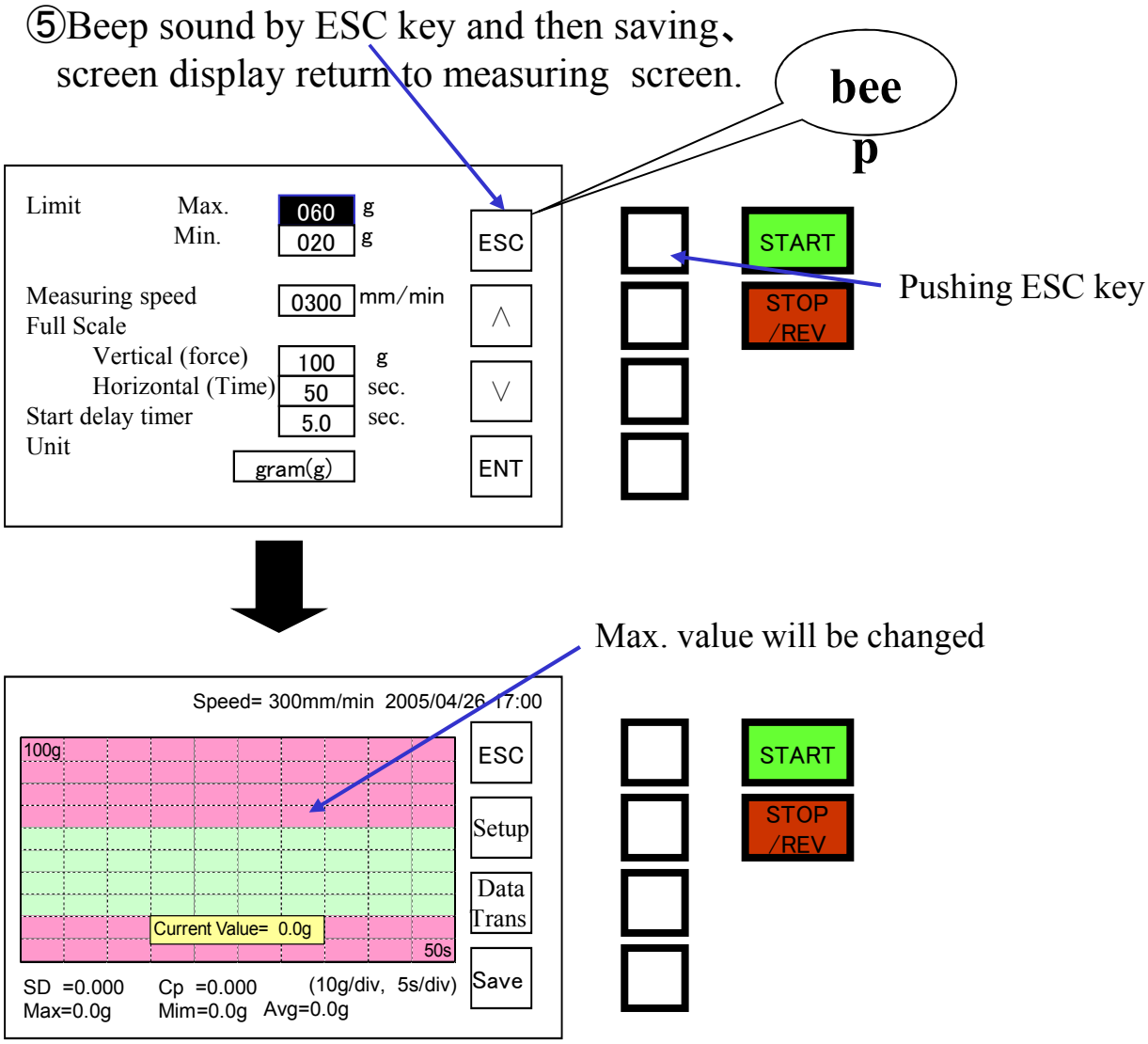

※other value setting is the same as above procedure .

5 Setting emboss tape

①Preparing below doubled sided adhesive tape。

②please paste double sided tape on rail plate as 20Cm length.
※refer to blue line marked.

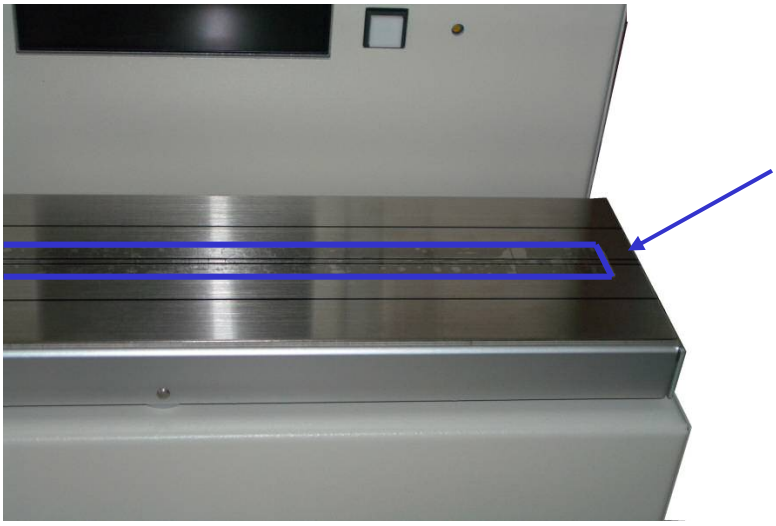

③Preparing sealed tape for measuring（around 20Cm）

④Sealed tape is set on rail plate with double sided tape.
please paste it aligning with reference line
and peel off for clipping cover tape to measure.

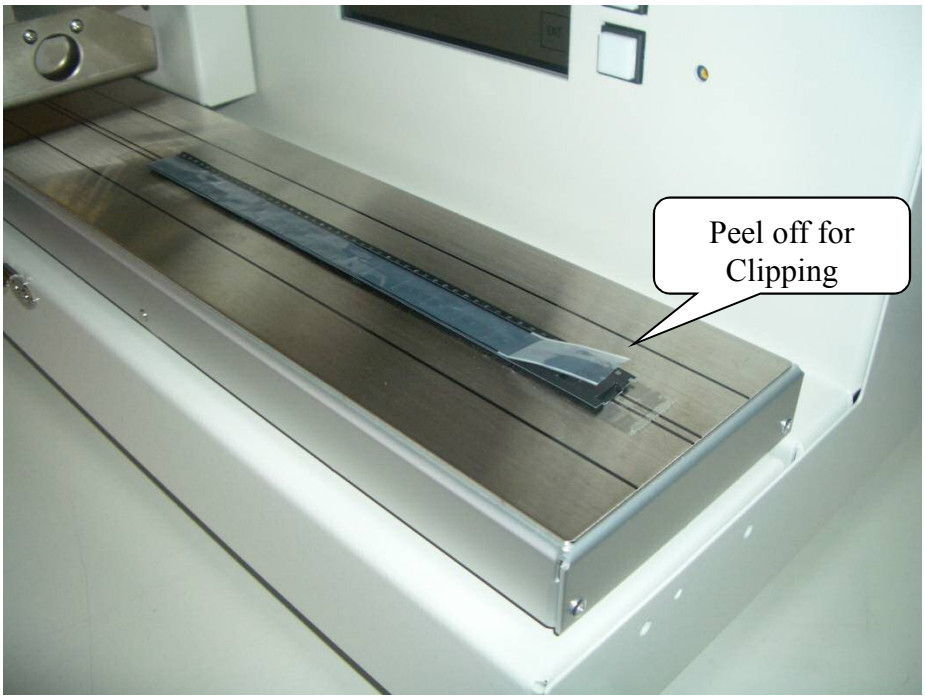

④please set the rail plate as starting position

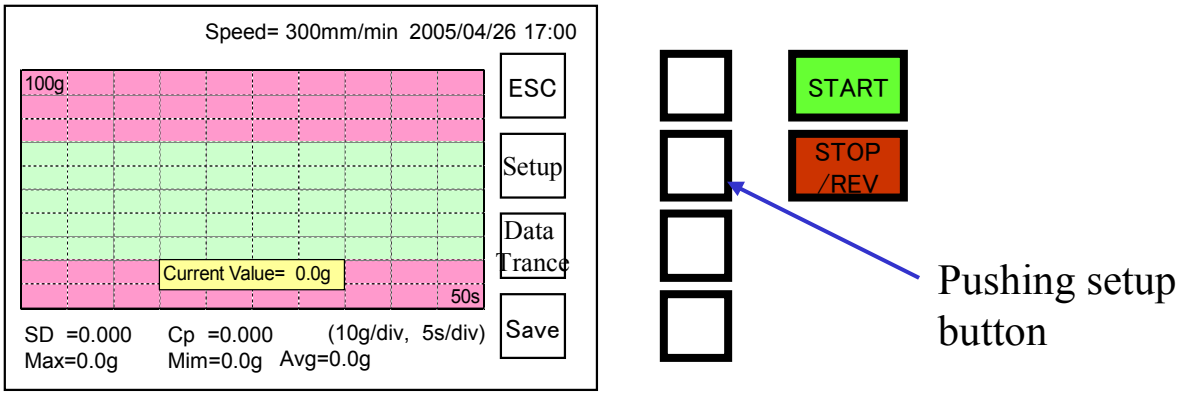

⑤Rail plate set as starting position and clipping cover tape .

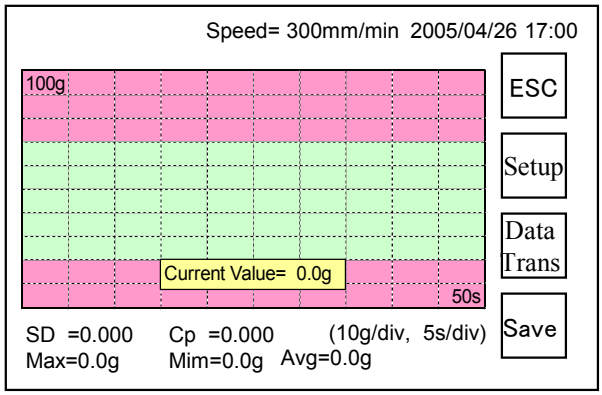

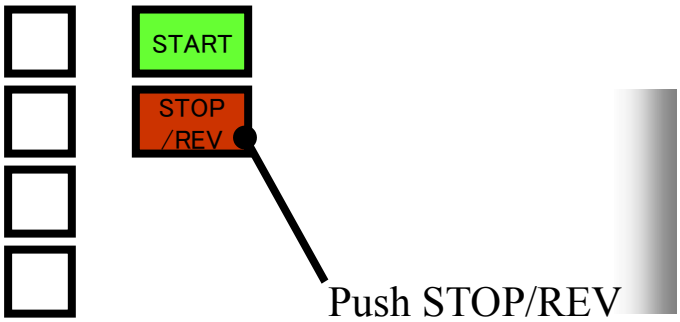

⑥Open the magnet clip for cover tape clipping.

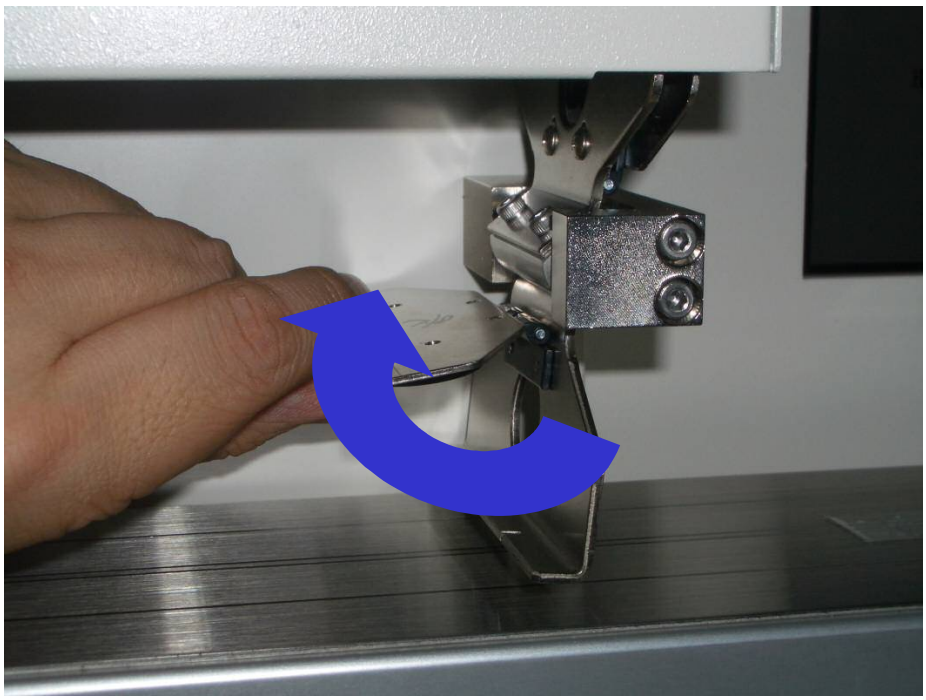

⑦Set the cover tape through center hole
and then fix the magnet clip as below.

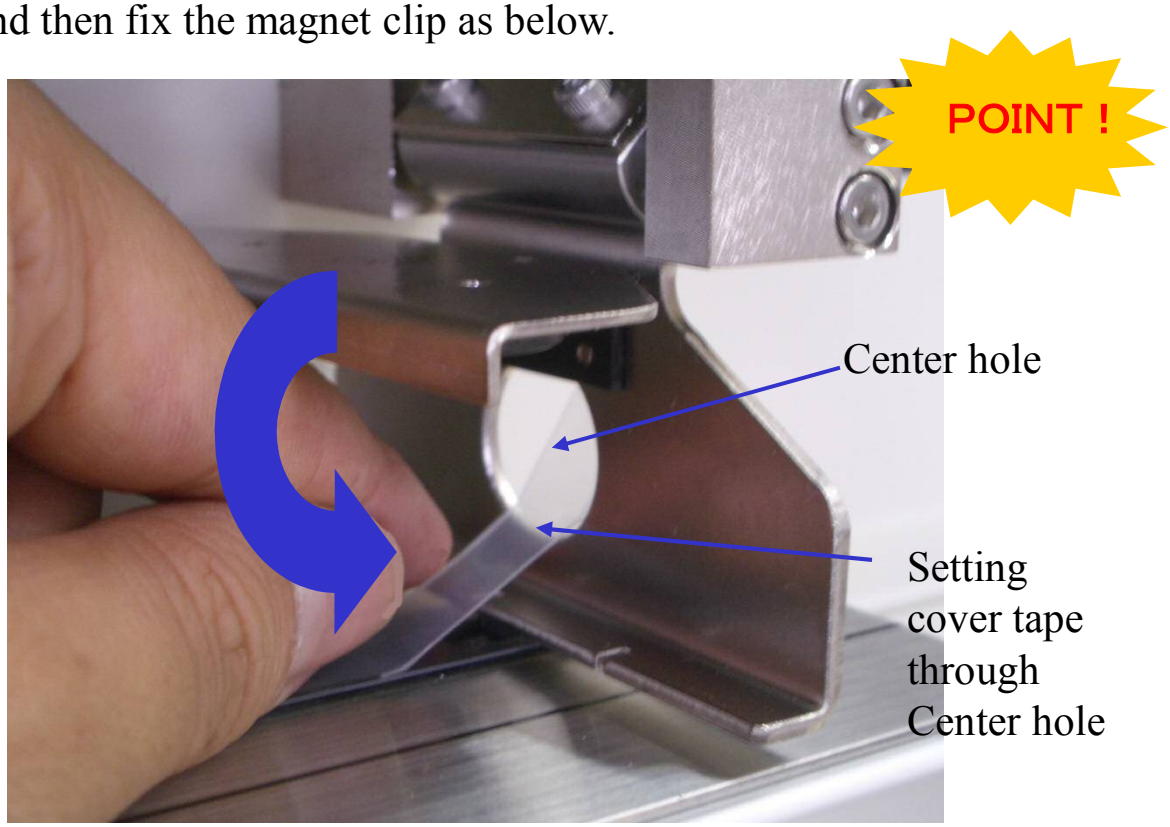

⑧Cover tape will be clipped as below.

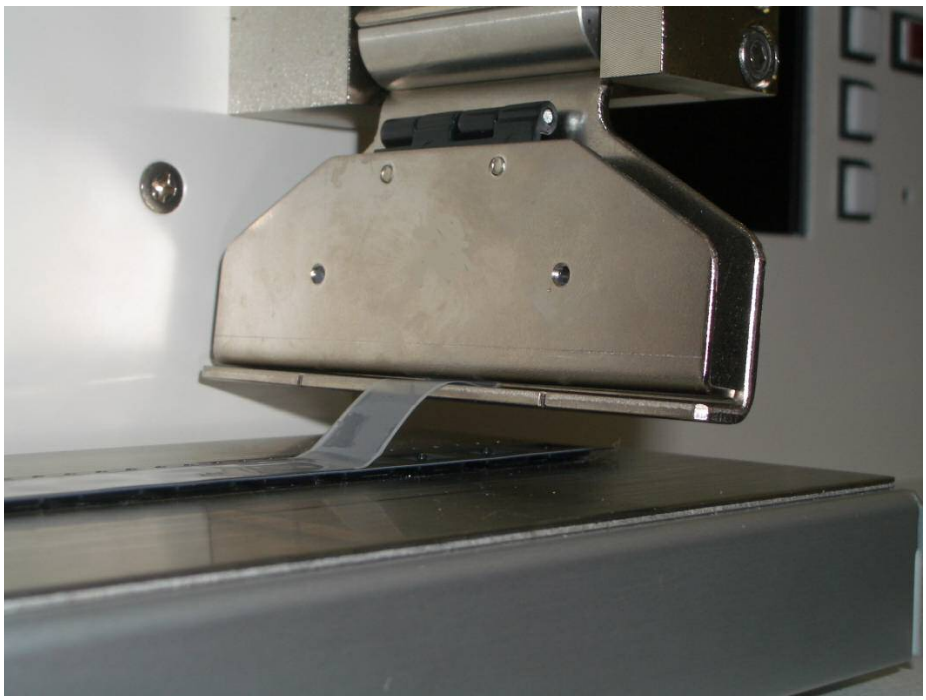

⑨please positioning the rail plate as below picture by manually.

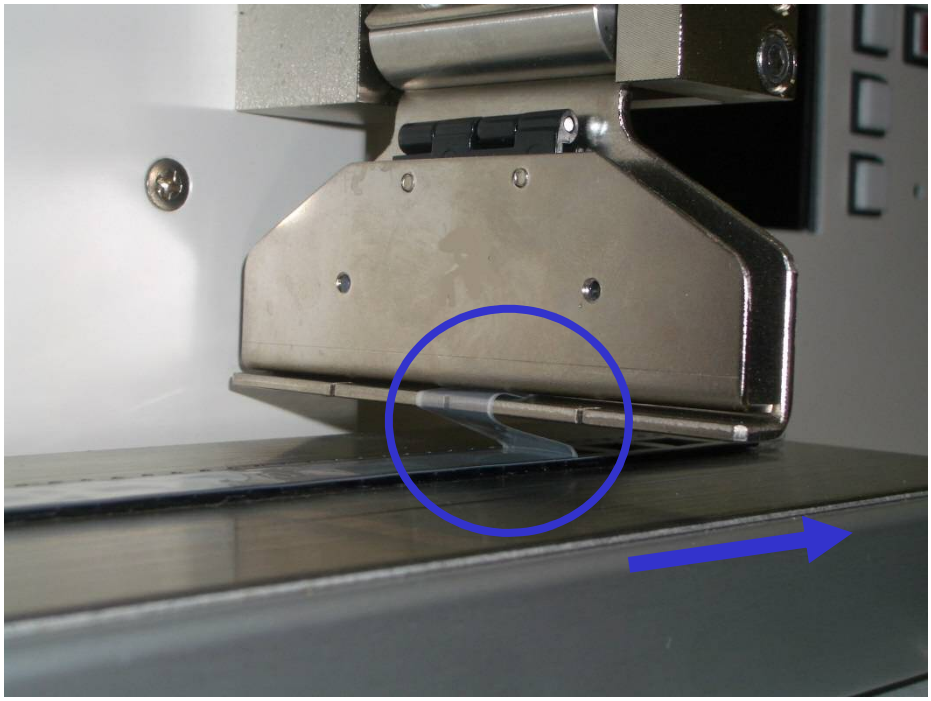

6 Height adjustment of load cell

POINT ! Measuring value is varied by peeling angle

Peeling angle of peel back force test is 165° ～180° by Para. C)4.7 of JIS C0806－3 specification。

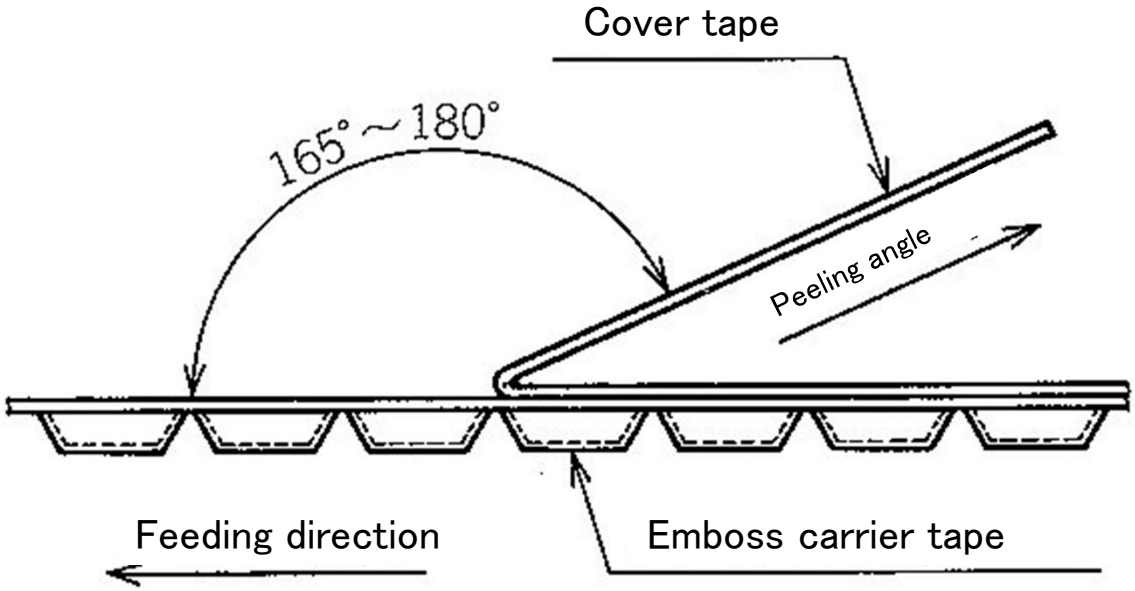

※Reference of c) 4. 7 of JIS C0806-3C

Generally the peeling force getting stronger as close to 180° .

(However it shows variations by kinds of carrier tapes)

①The height of load cell can be adjusted by turning thumb wheel knob。

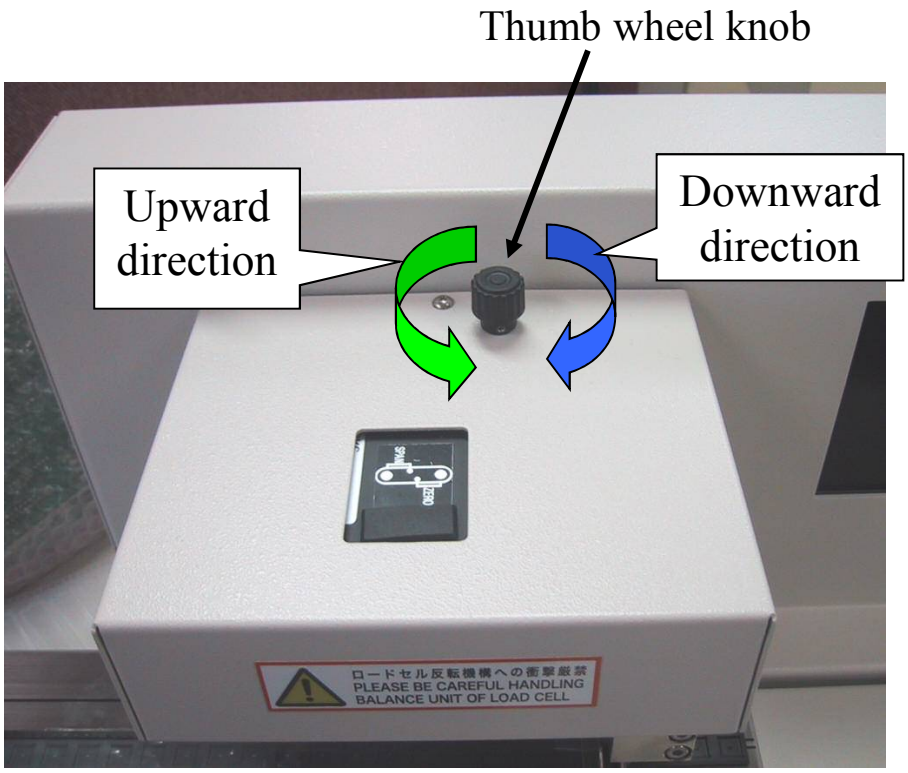

②Turn the load cell height adjustment knob as close as possible to carrier tape.

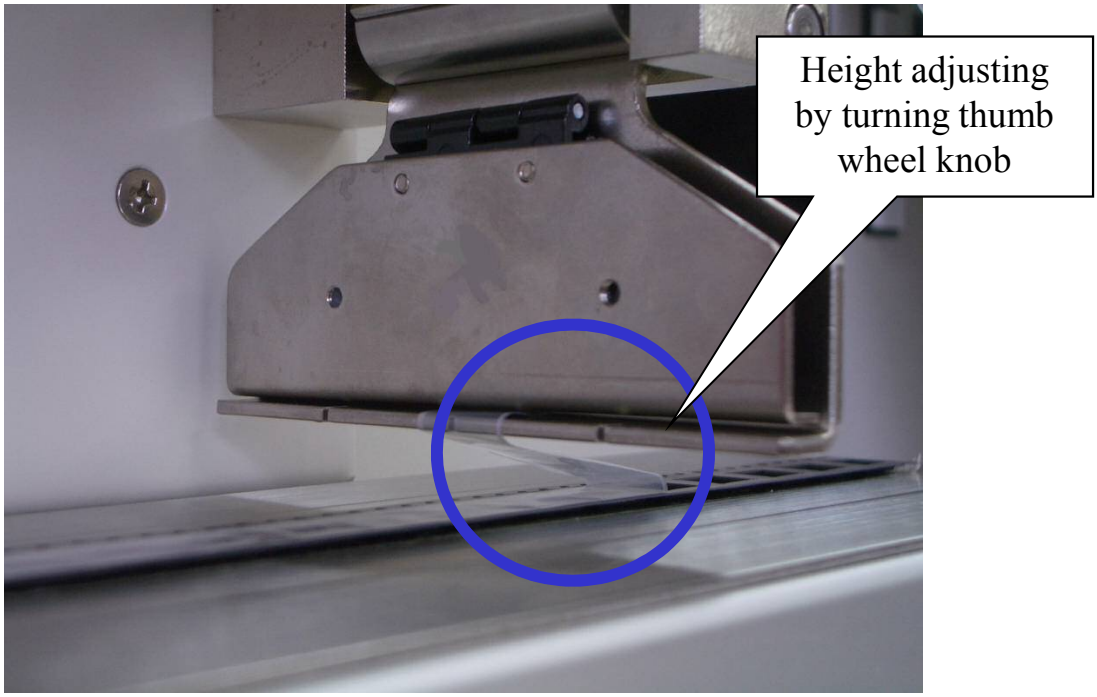

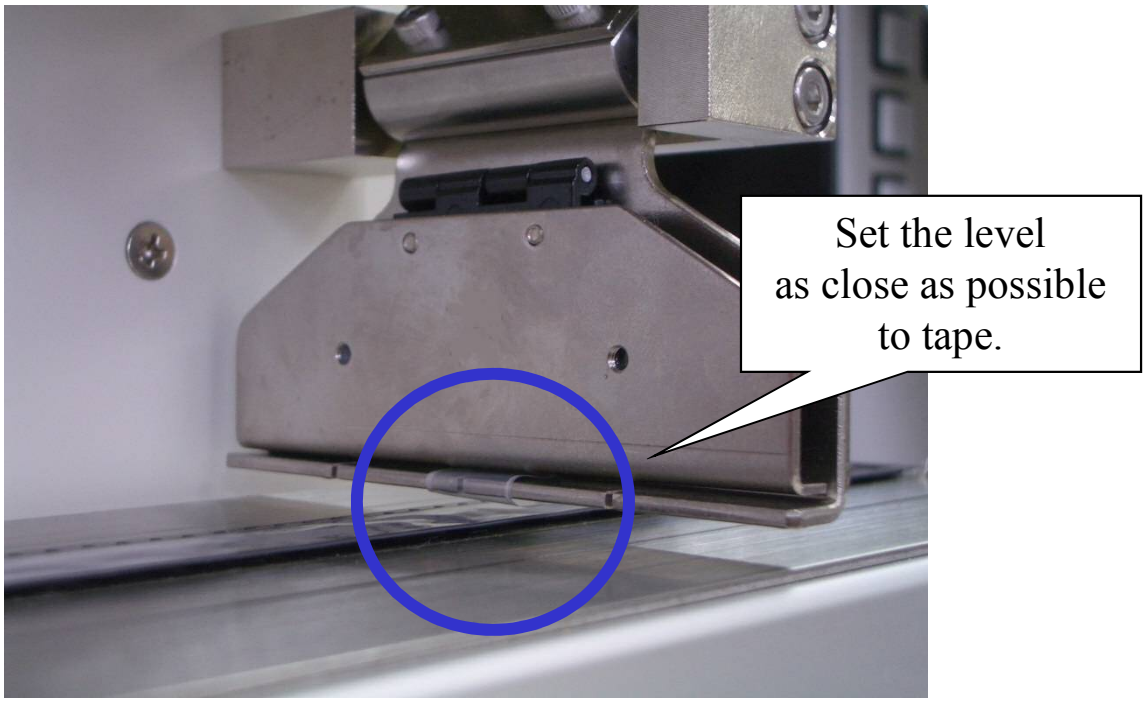

Ready to measure by above procedure

●Chart recorder（option）

Data recording can be done by chart recorder.

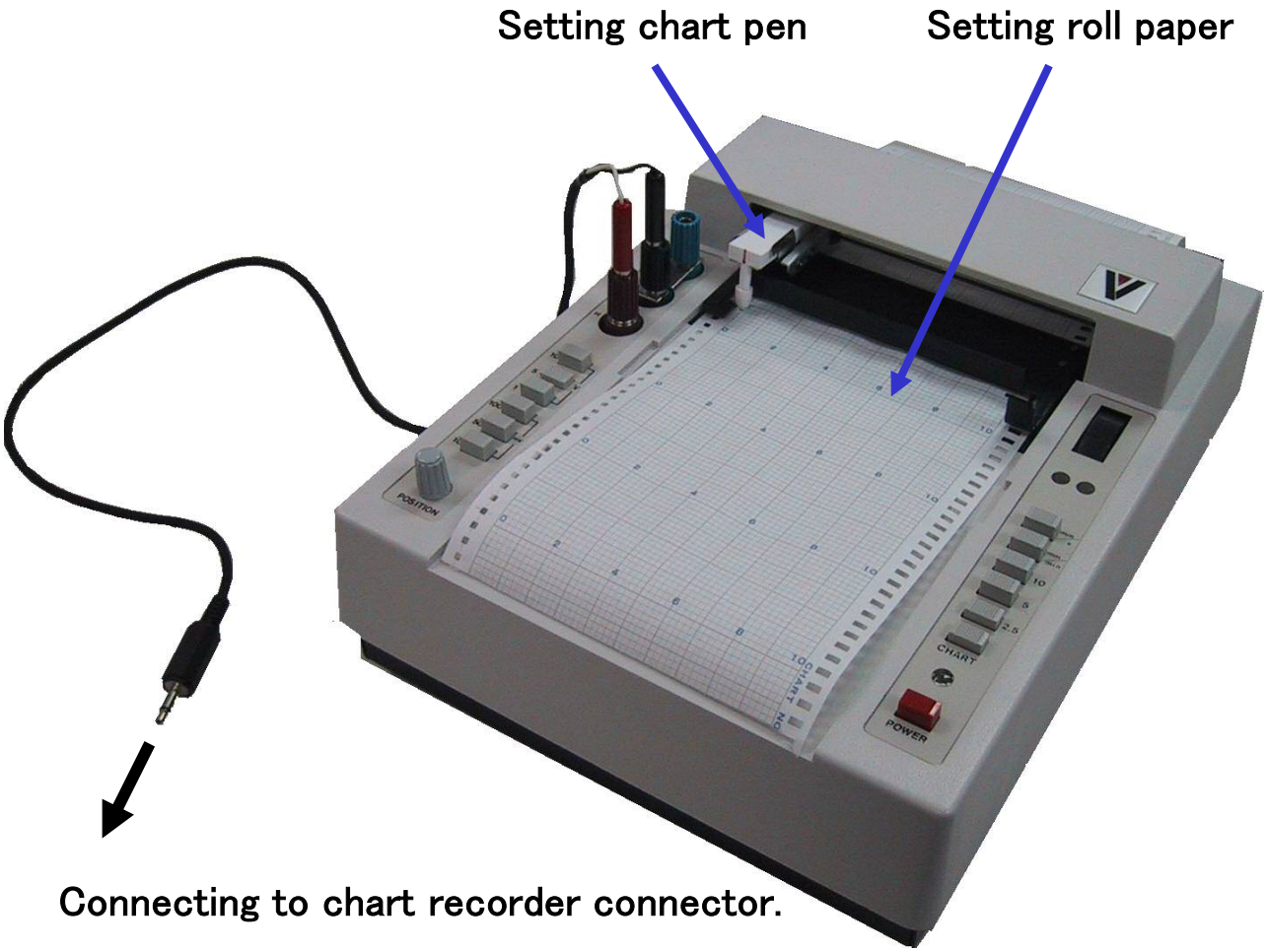

This product has already been out of production.

Name & Function

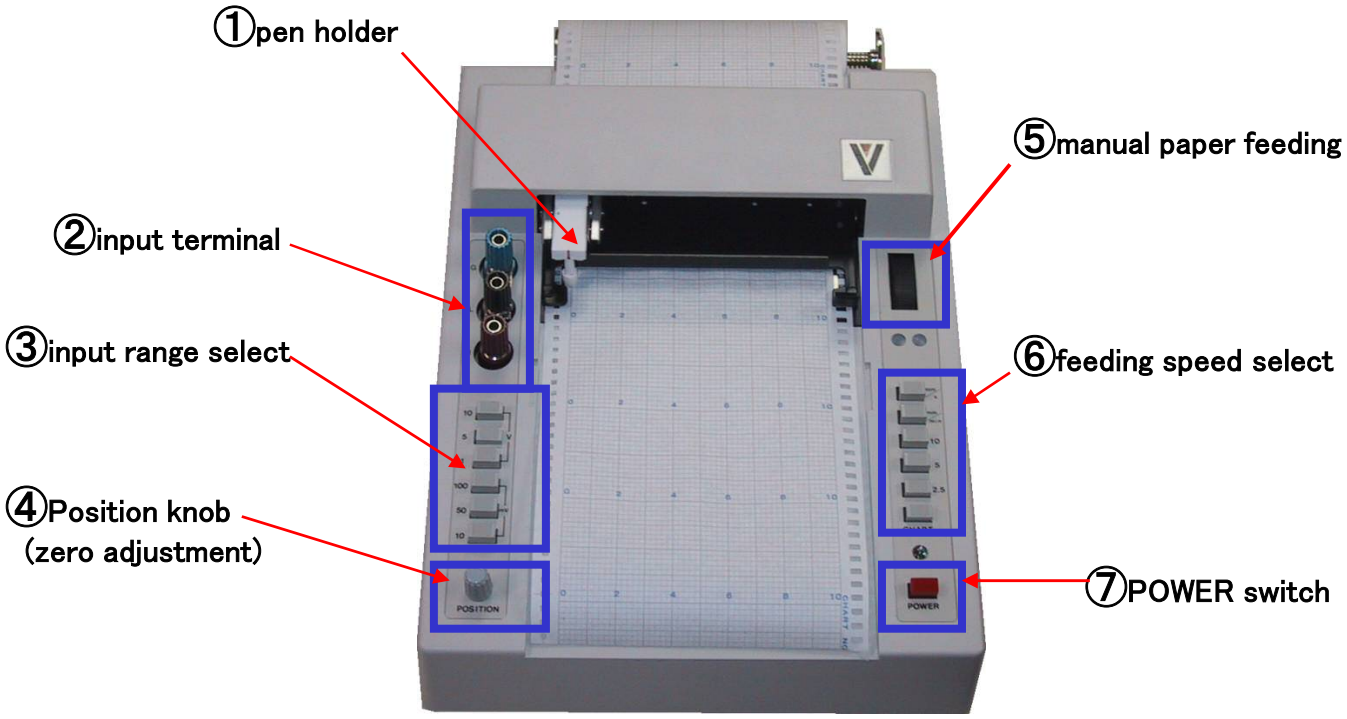

①Pen holder
:Setting the pen。
②Input terminal
:connecting the cable from VG-35 mainframe
(Please short between G-L normally)
③Input range select switch
:10V Range・・・Max value will be 200g on chart
5V Range・・・Max vale will be 100g on chart
1V Range・・・Max value will be 20g on chart
④Position adjust
:Zero adjustment of pen position with no load.
⑤Manual paper feeding dial
:Feeding the paper manually.

This product has already been out of production.

⑥Feeding speed select

:mm/s ・・・Feeding the paper per second(10, 5, 2.5mm/Sec)

mm/min・・・Feeding the paper per minute(10, 5, 2.5mm/min)

10・・・10mm/sec or 10mm/min

5・・・5mm/sec or 5mm/min

2.5・・2.5mm/sec or 2.5mm/min

CHART・・・Feeding roll paper automatically

⑦POWER switch

:power ON switch

This product has already been out of production.

■Measuring start

1 Push start button when ready

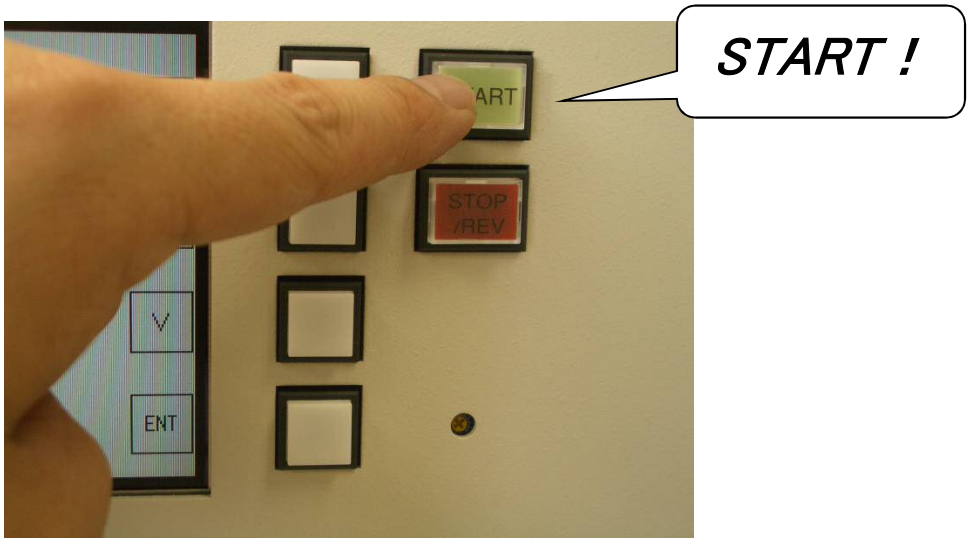

2 Measuring is starting by moving rail plate

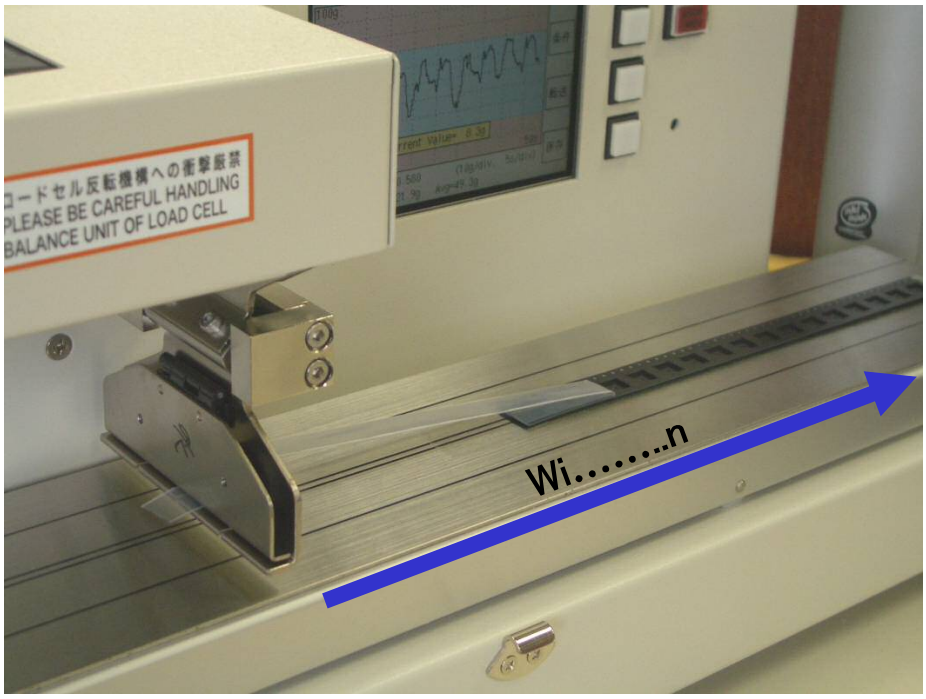

3 Starting real time graphic displaying on LCD panel

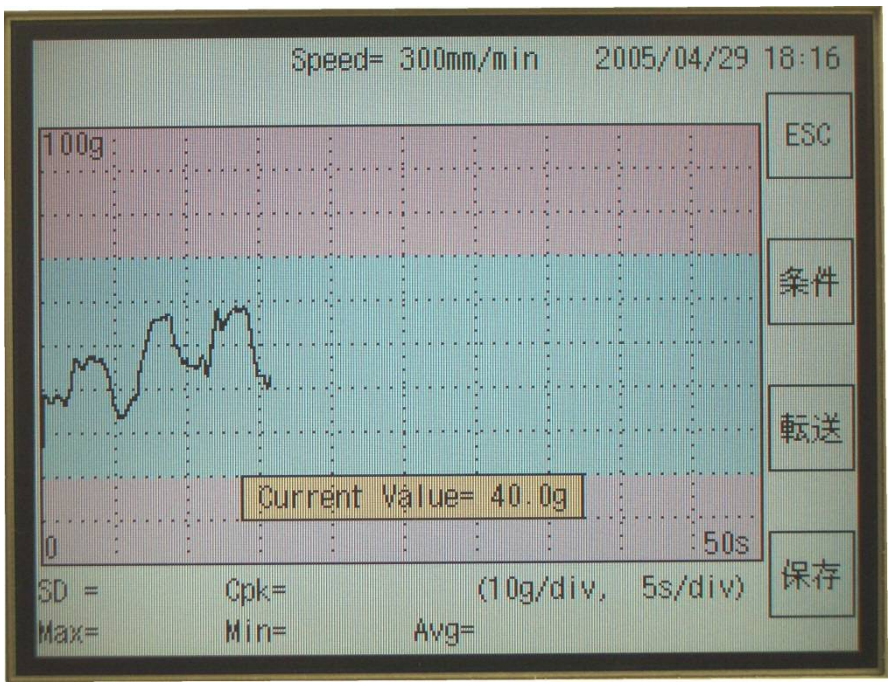

4 Measuring will be stopped by STOP/REV button or reaching limit position.

5 Displaying all of data when finished measuring.

Final result
(NG will be displaying when failed)

Measuring speed

Date &time

graph

Current Value

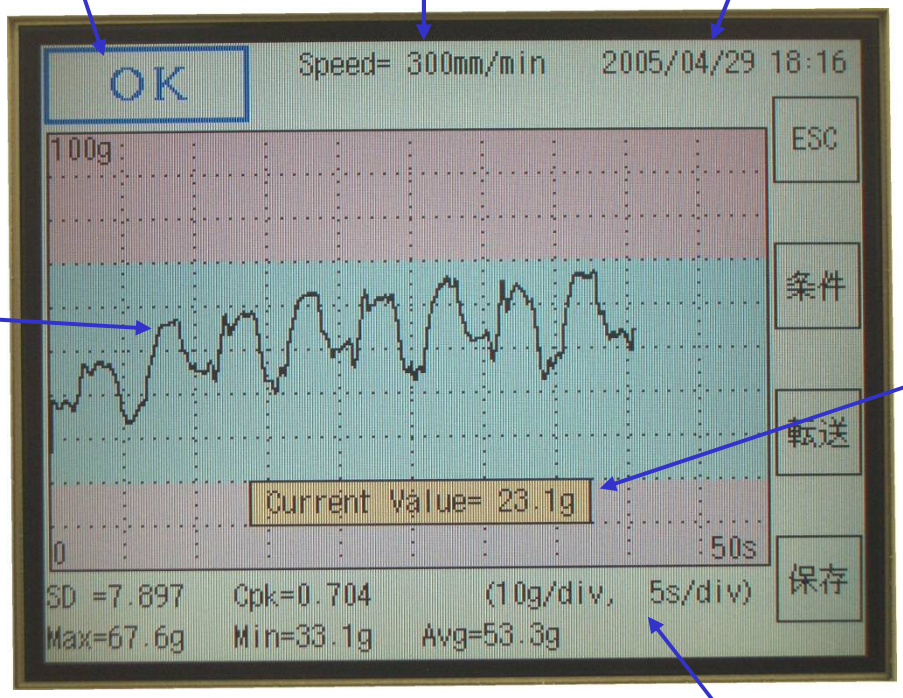

Vertical,
Horizontal
Scale

SD＝Standard deviation
Cpk＝Production coefficient
Max＝Maximum Value
Min ＝Minimum Value
Avg＝ Average Value

■Saving data

1 Peel force measuring data saving

Pushing SAVE button when measurement data saving.
Push ENT button after confirming data saving message.

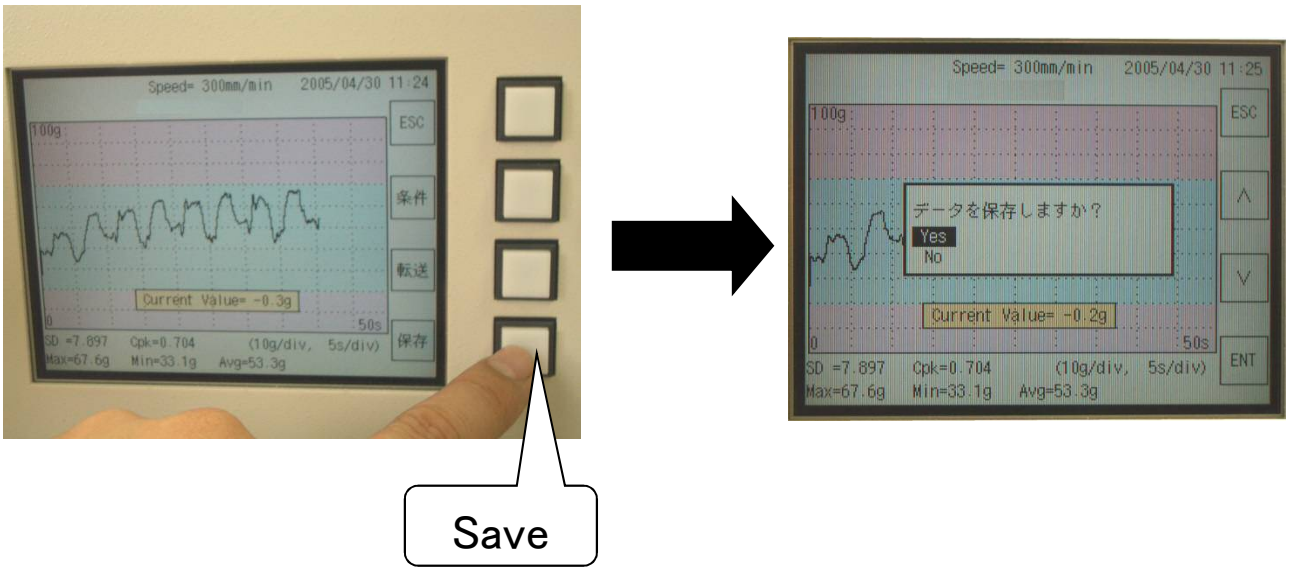

2 Set data saving address

Set data saving address by ENT key after scrolling ∧∨ key.
Saving up to 16 data files.

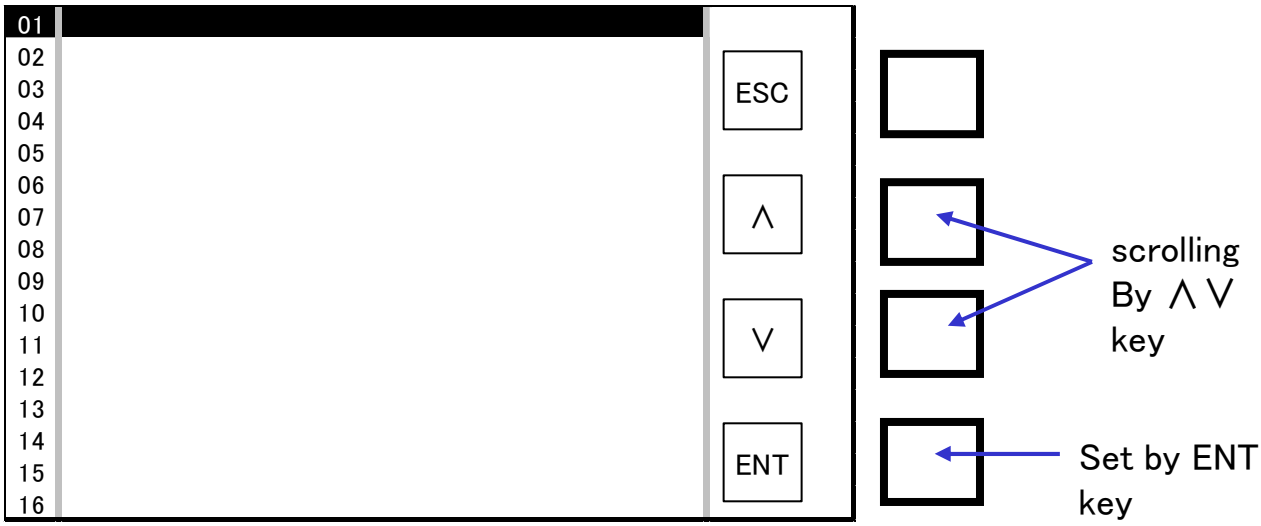

3 Input file name

①Push ENT button when data input screen is ready。

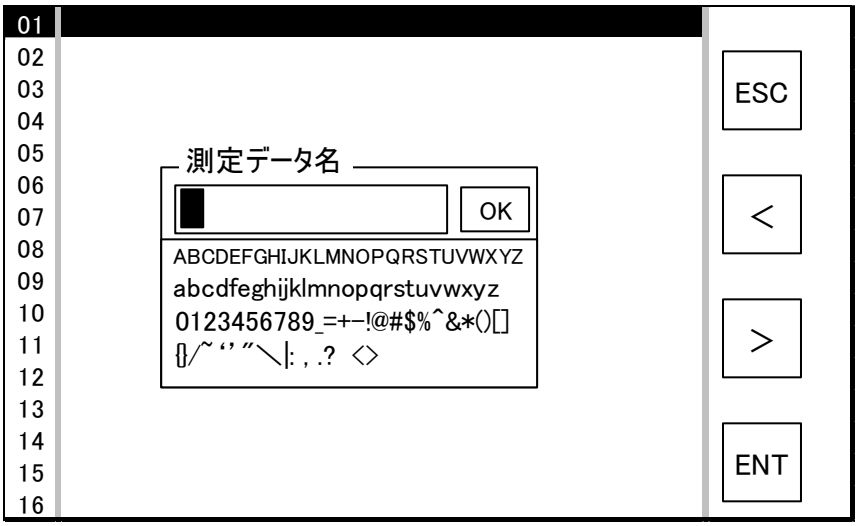

②Enabling data input after push ENT button

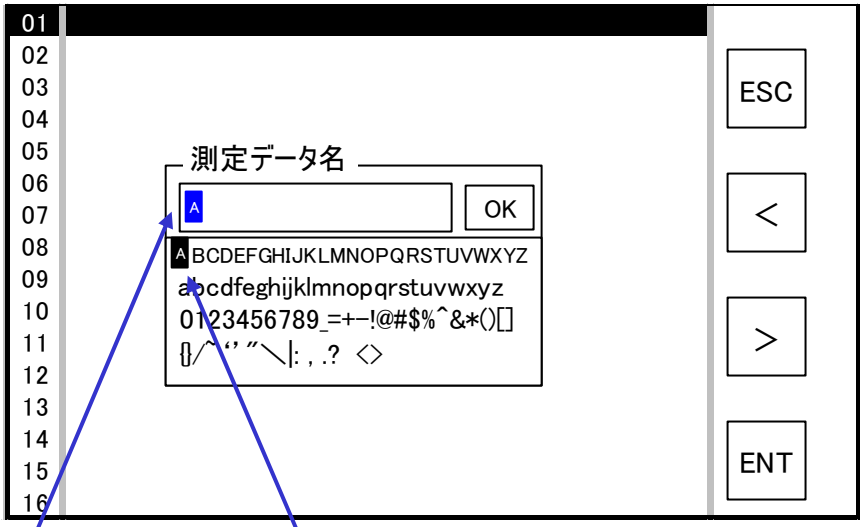

blue background color

black background color

③Input file name（Max. 16 letters）

（ex）input “TEST”

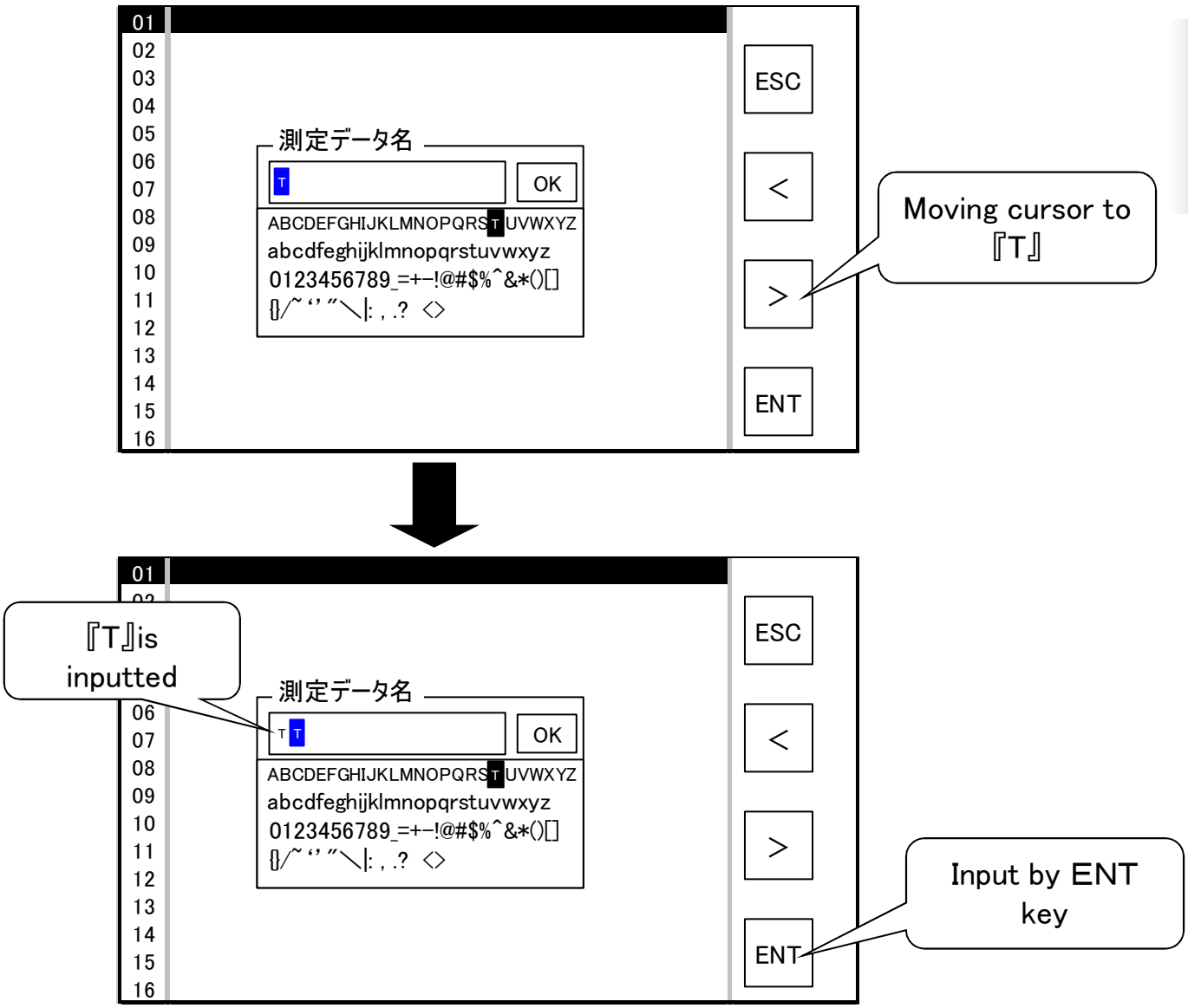

Please input remaining letters as above.
Push ESC key when input is completed.

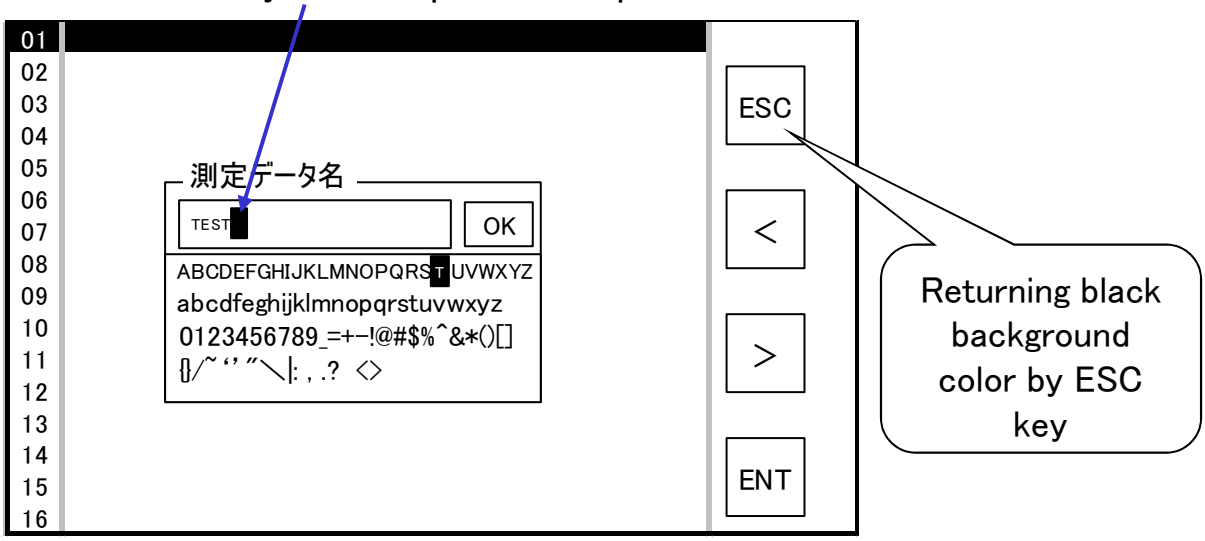

move cursor by ＞ key to OK and push ENT key。

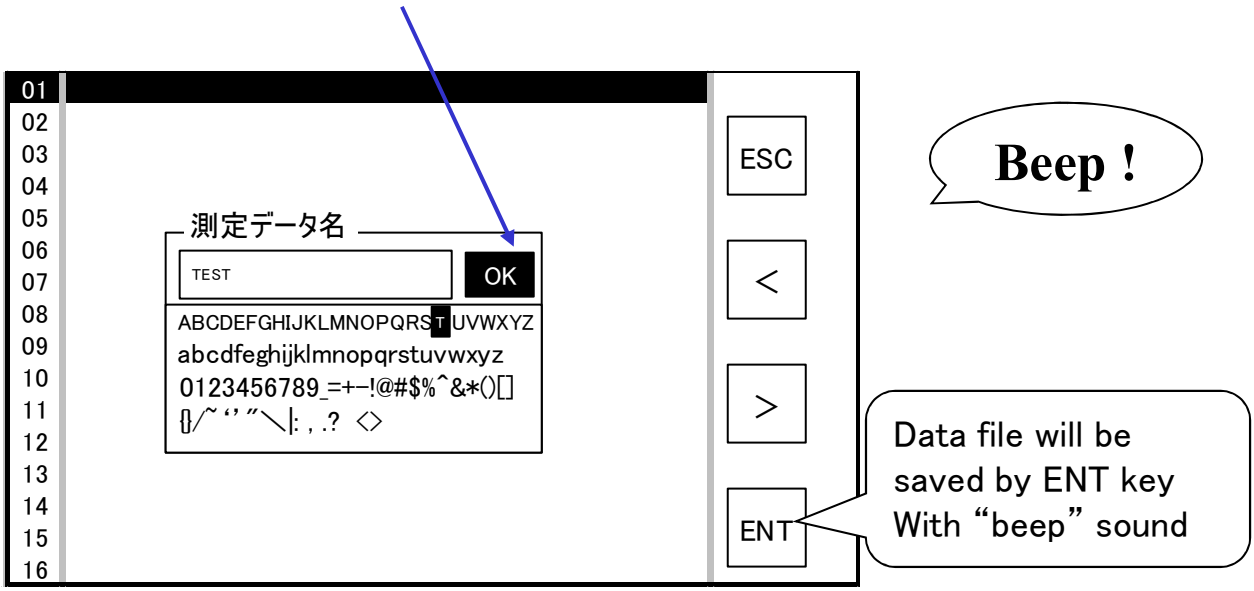

File name will be displayed on measurement screen.

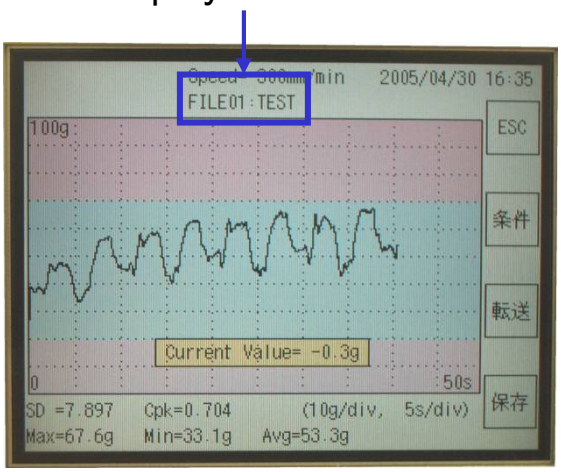

No. File name, date ,time will be displayed on data file display screen.

PC interfacing

■VG-35 Data Manager installation

1 Connecting USB cable（Mini－B male） to USB connector of side panel、the other side of USB（A male）is connected to PC.

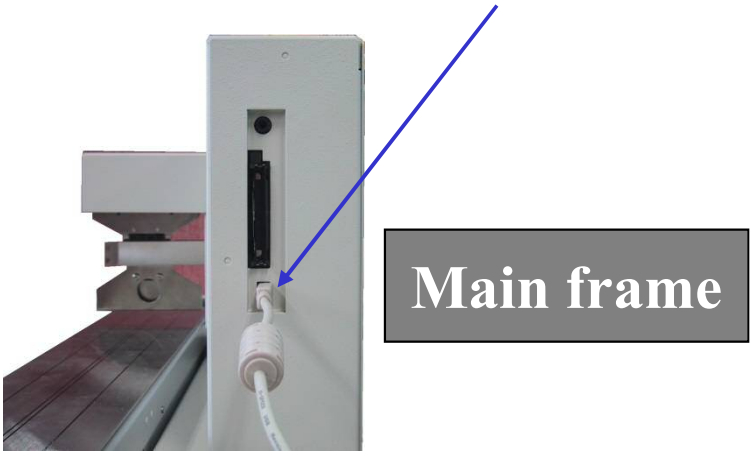

2 Starting hardware wizard
Click next（N）.

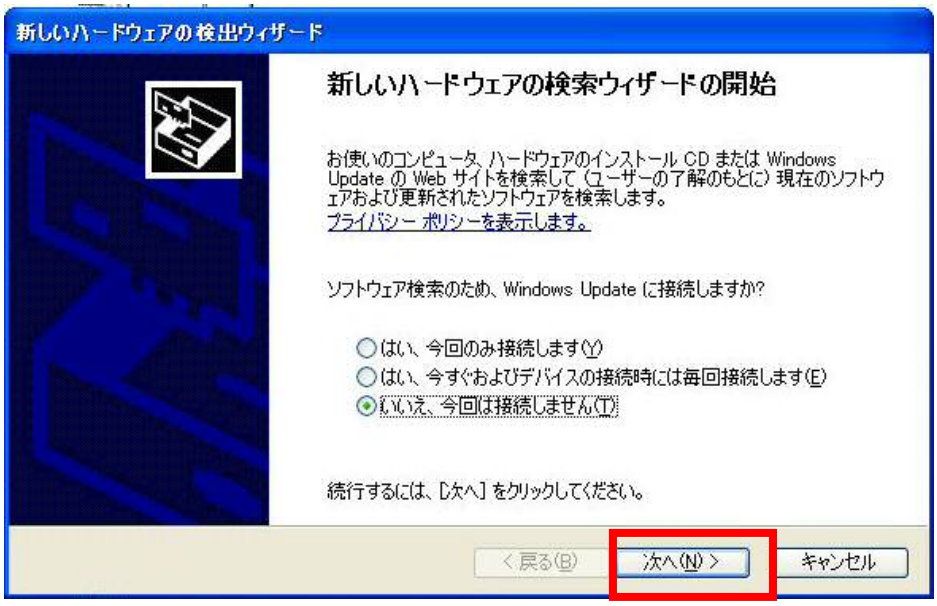

Click

3 Please click next (N) after loading 『VG-35 Data Manager installation CD』.

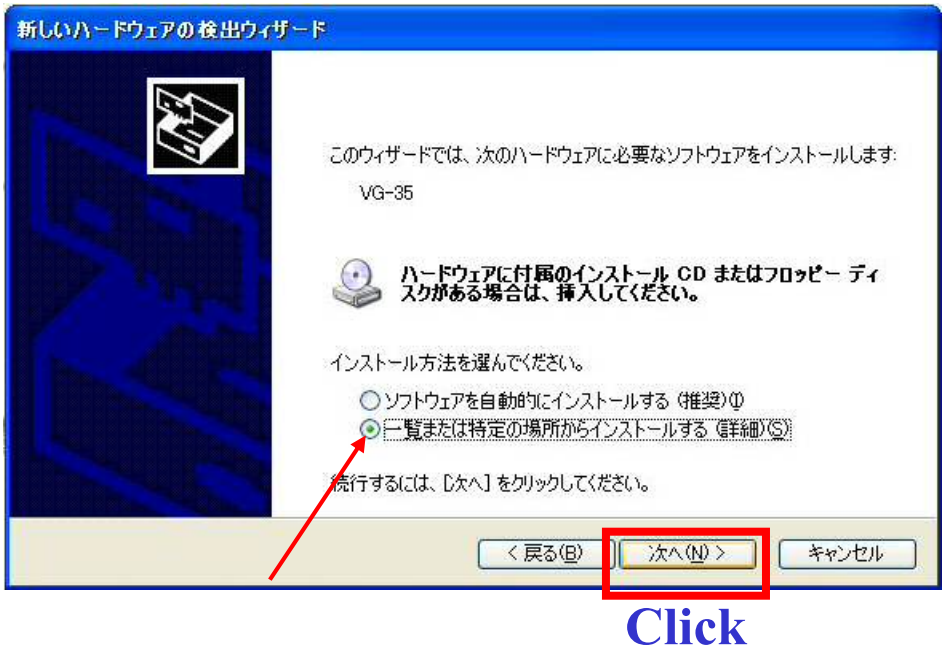

Click

4 Please click next(N) as below setting。

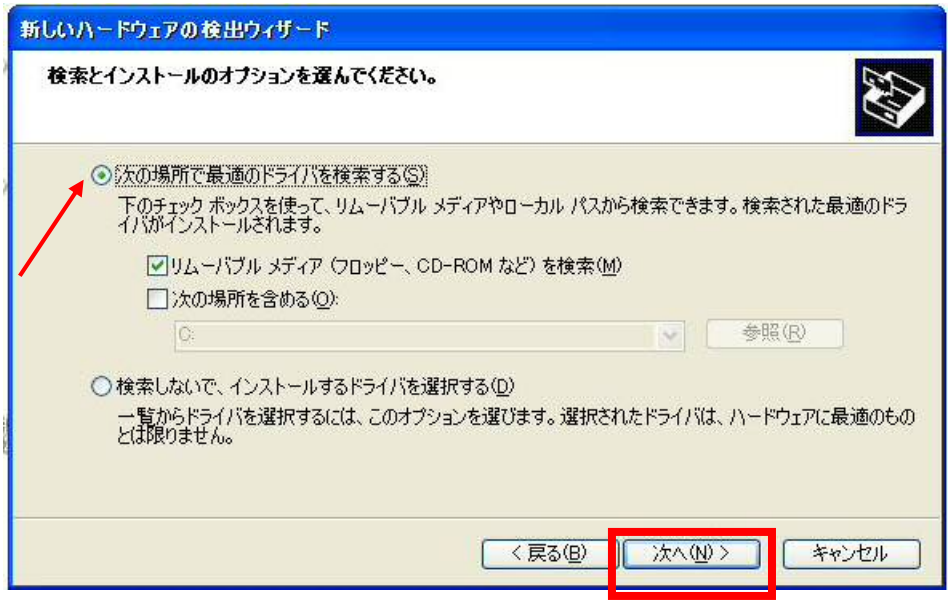

Click

5 Hardware installation is starting automatically by file searching.

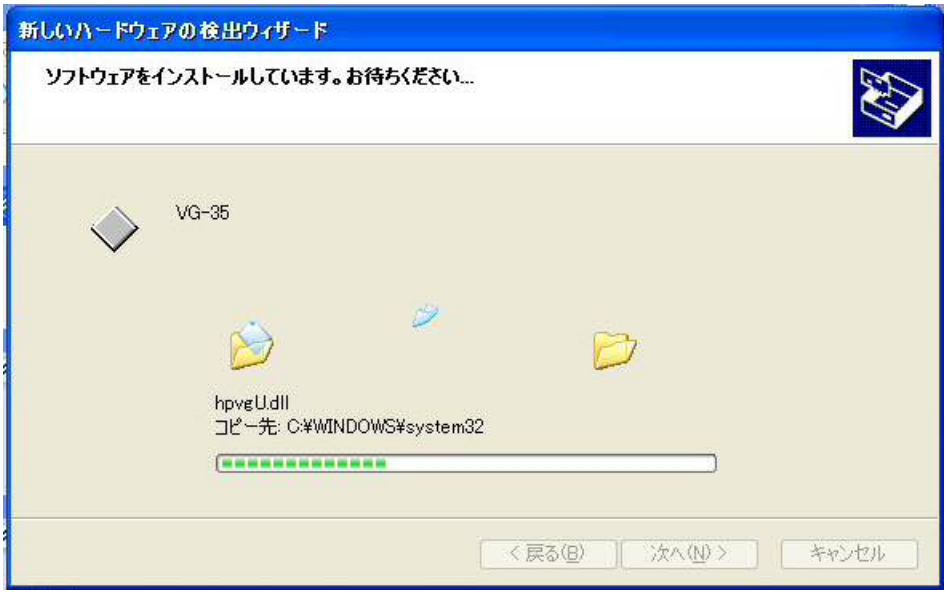

Execution of hardware wizard is completed.
Software installation will be preceding by next step.

6 Starting software installation.
Double clicking 『VG-35』 folder of CD.

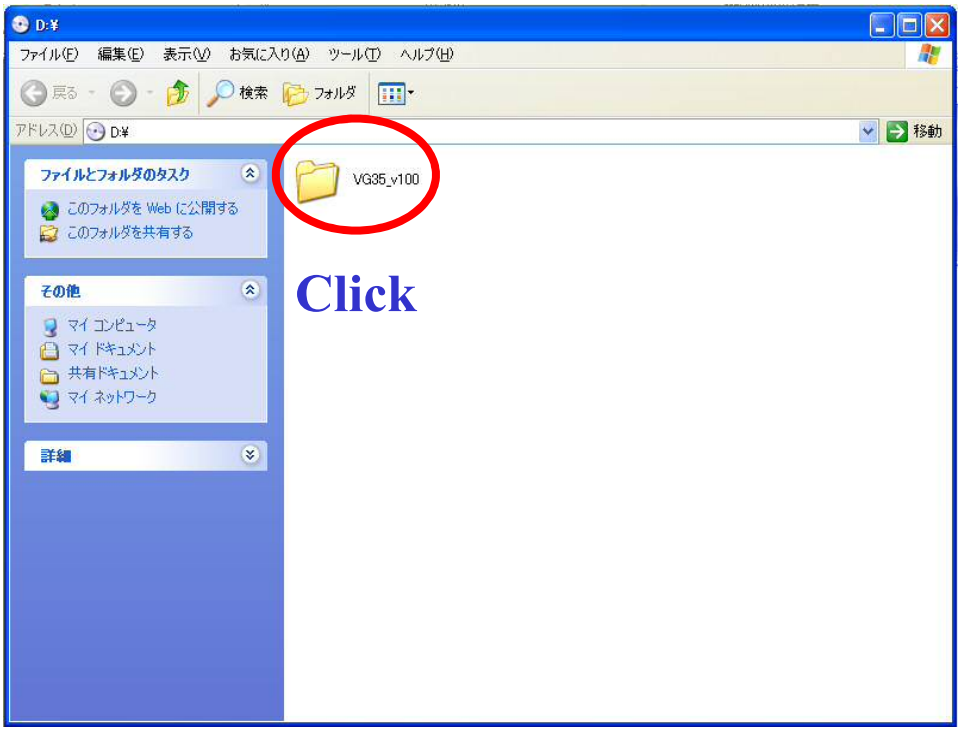

7 Installation starting by 『VG35 Setup』 clicking。
Click 『YES』.

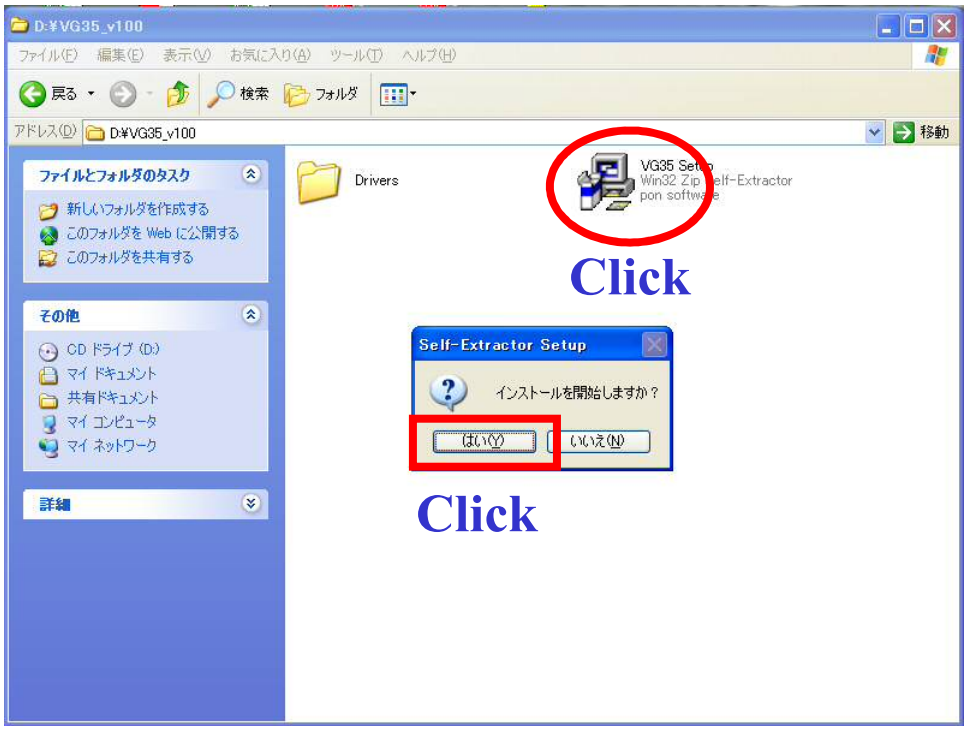

8 Starting setup wizard.
Click next(N).

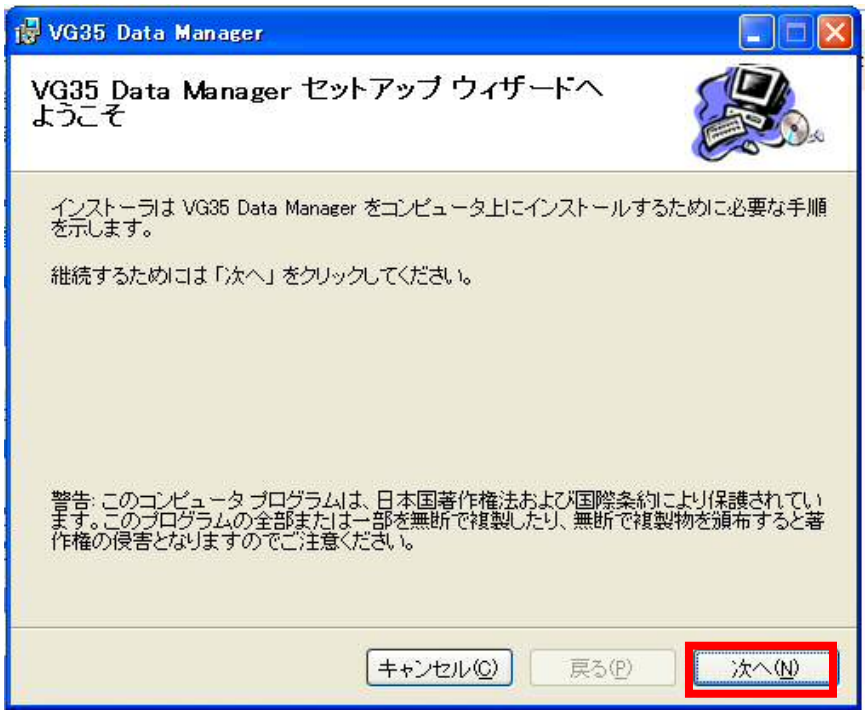

Click

9 Click next(N) after select installation folder.

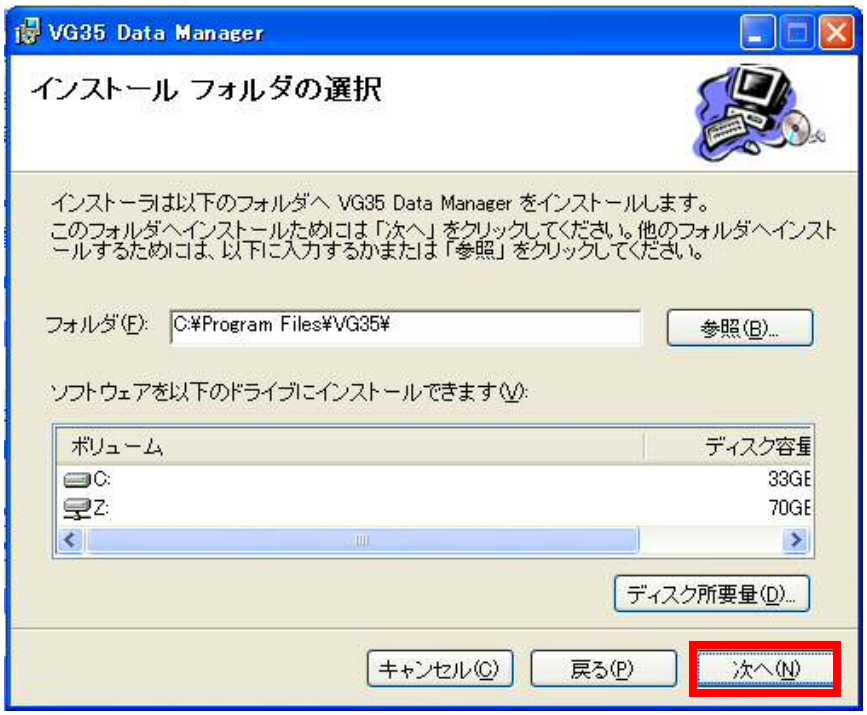

Click

10 Below is installation screen.
Installation is starting by clicking next(N)

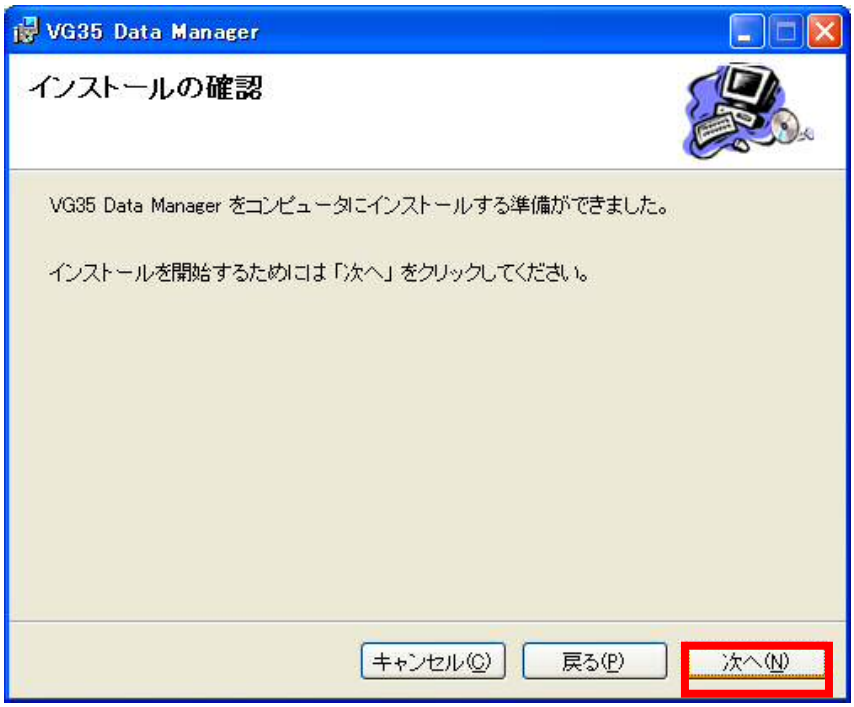

Click

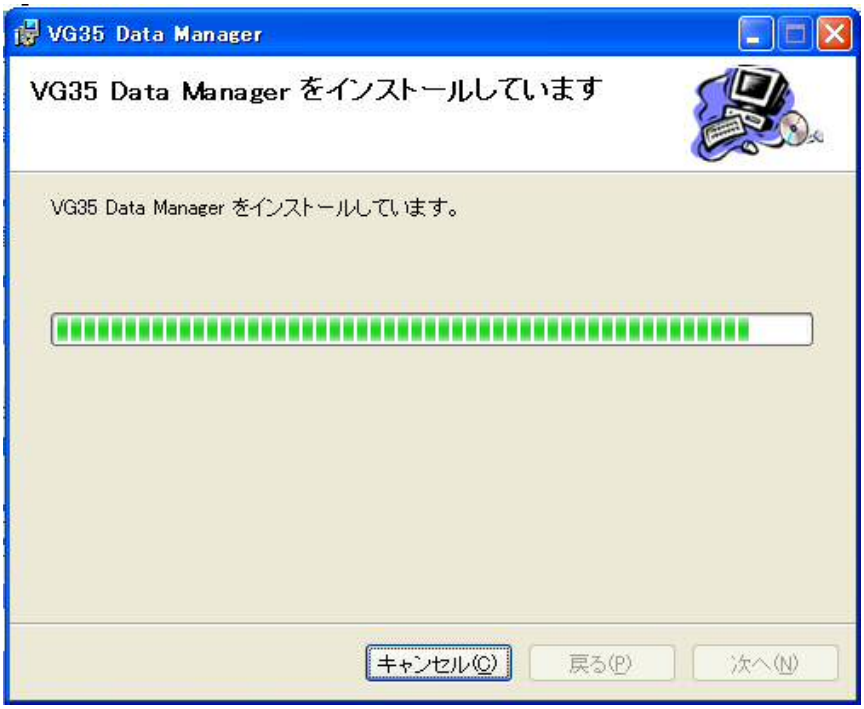

11 Completed installation. Clicking close（C）

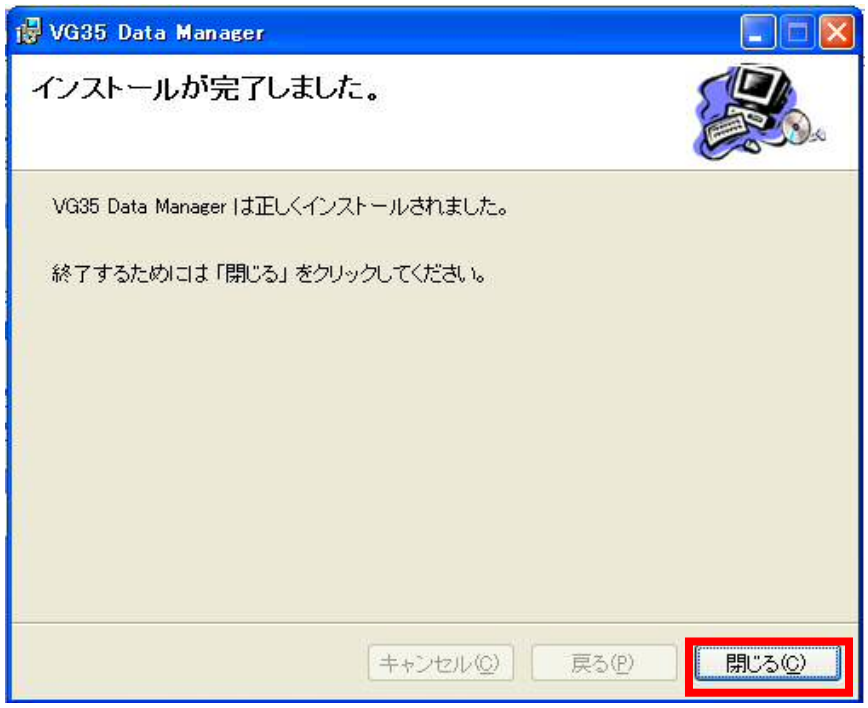

Click

12 Short cut icon will be displayed on desk top .

The installation is completed by above procedure.

■Run VG35 Data Manager

1 VG35 data manager will run by clicking VG35 data manager icon.

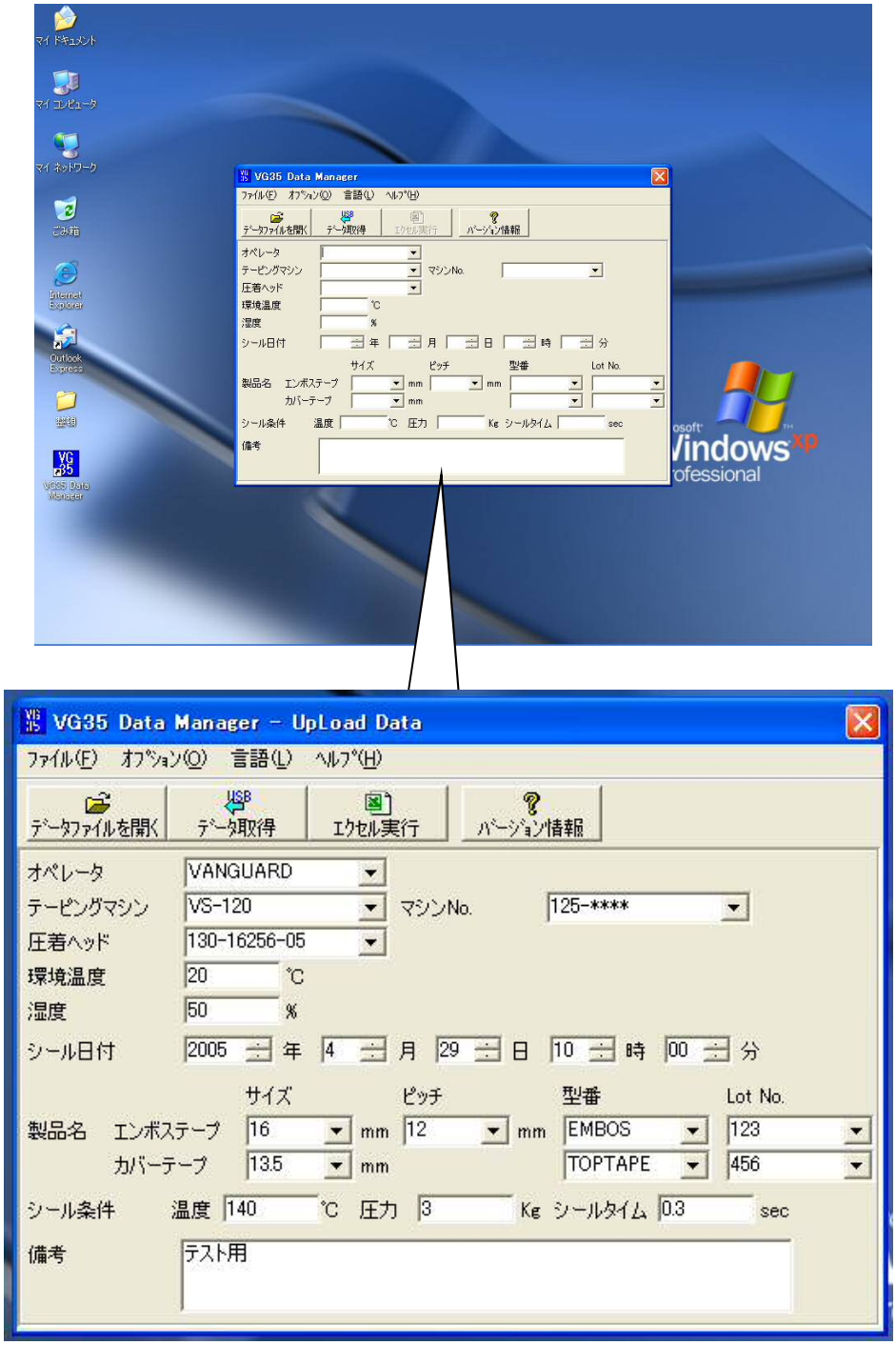

Please input necessary information on screen display.

2 Data file transfer －USB－

2－1 Data transfer to PC thru USB

Connecting USB cable (AB type :mini/option) to USB connector.

VG－35 mainframe

2－2 Pushing data trans button on measuring screen.

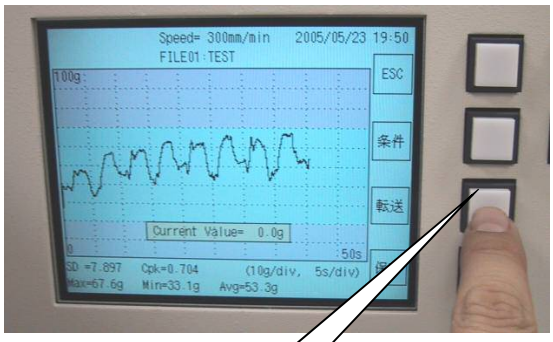

Data trans

Select USB

2－3 Starting data transfer.

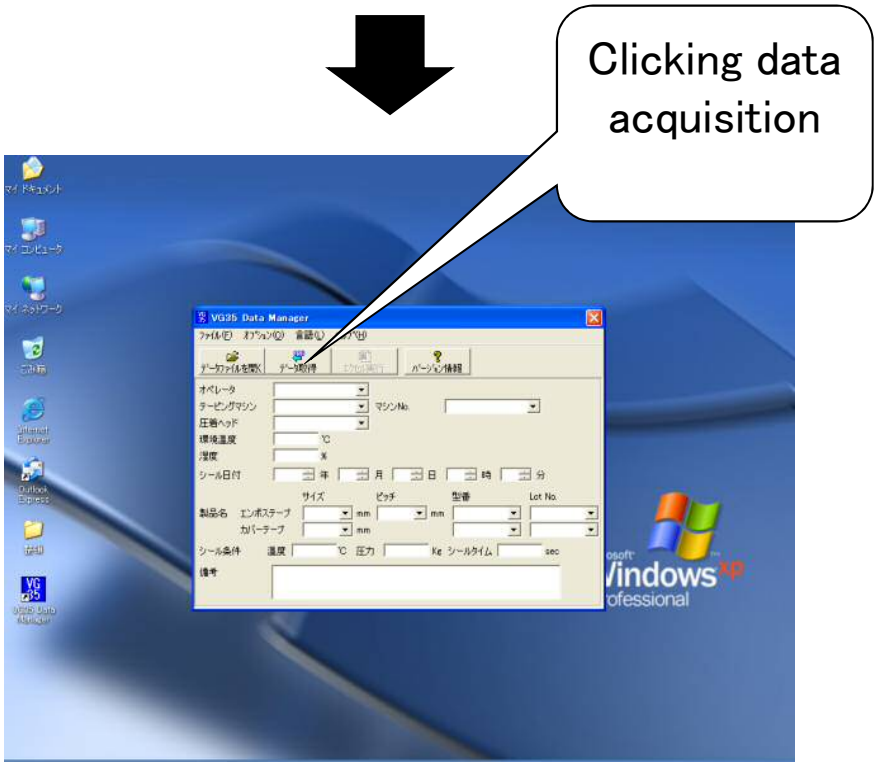

2－4 Acquiring the data from VG-35.

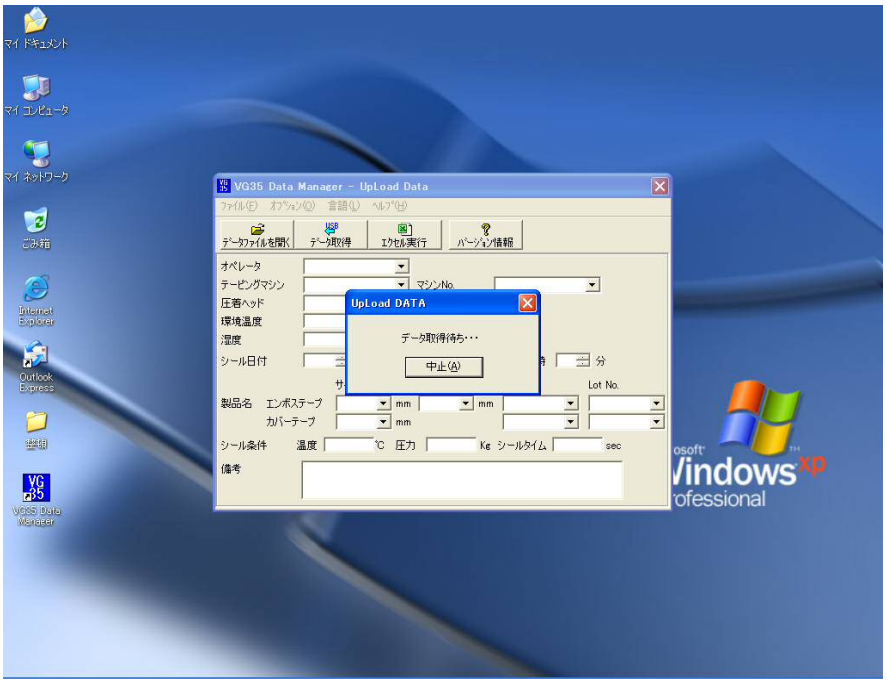

Above window will be displayed while data acquiring.
The “beep” sound run from VG-35
when completed data transferring to PC.

3 Data file transfer －Compact flash memory－

3－1 Data transfer to PC by CF memory.

Insert the CF memory to connecting slot.

VG－35 Mainframe

3－1 Pushing data trans button on measuring screen.

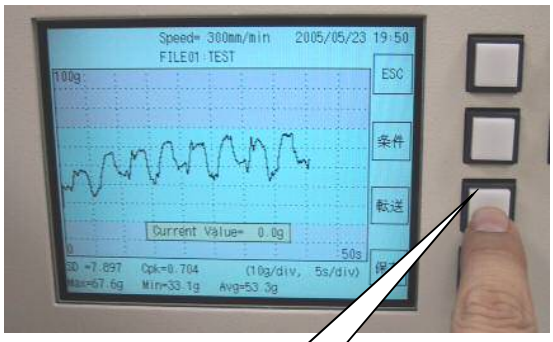

Data trans

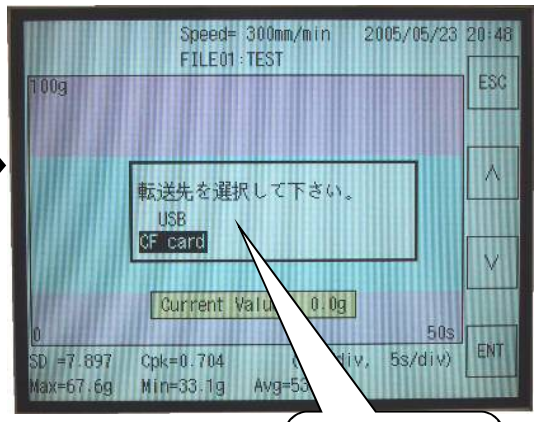

Select CF card

3－3 Saving data to Compact Flash memory.

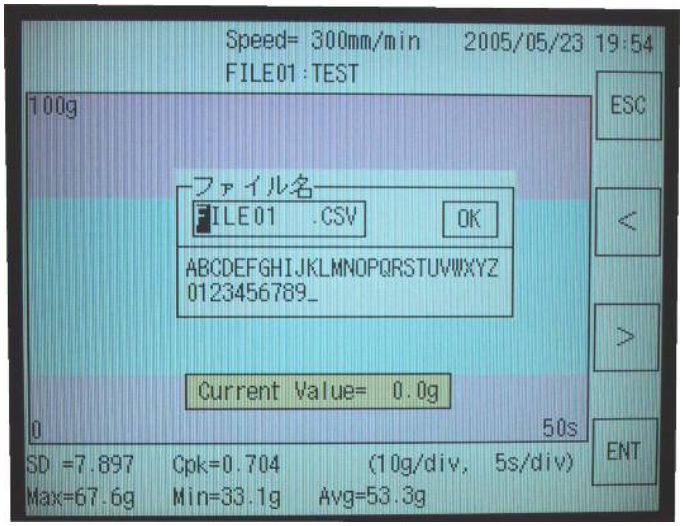

Input file name（up to 8 letters）

Starting save by clicking OK button.
The “beep” sound run when completed saving.

3－4 Insert CF memory to PC card slot after remove from VG-35 CF memory slot. Clicking data file open after inserting .

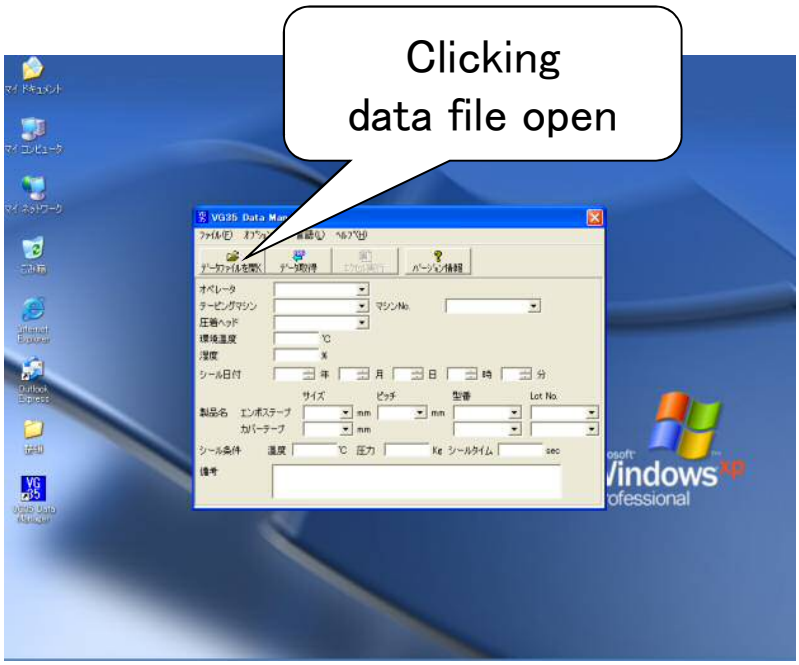

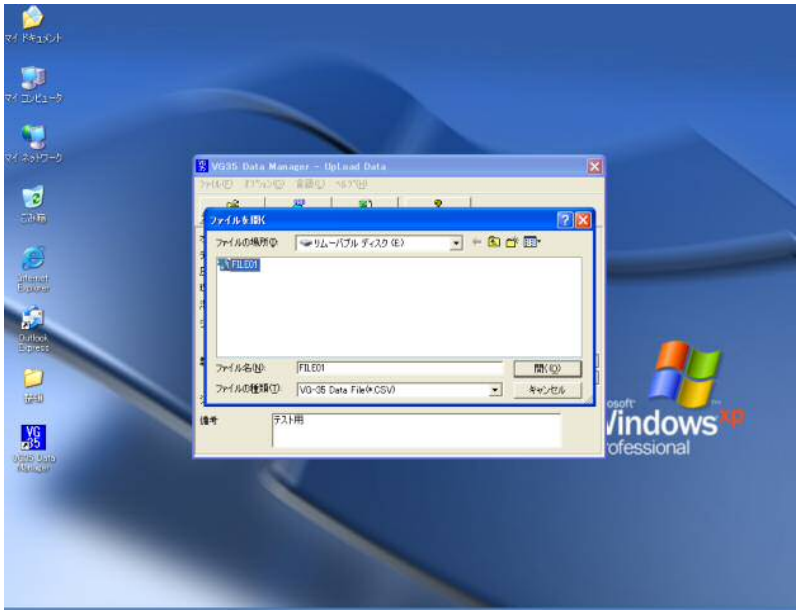

Open the saved file .
Returning menu screen.

■Run excel

Run excel after completed main menu data input and data acquisition.

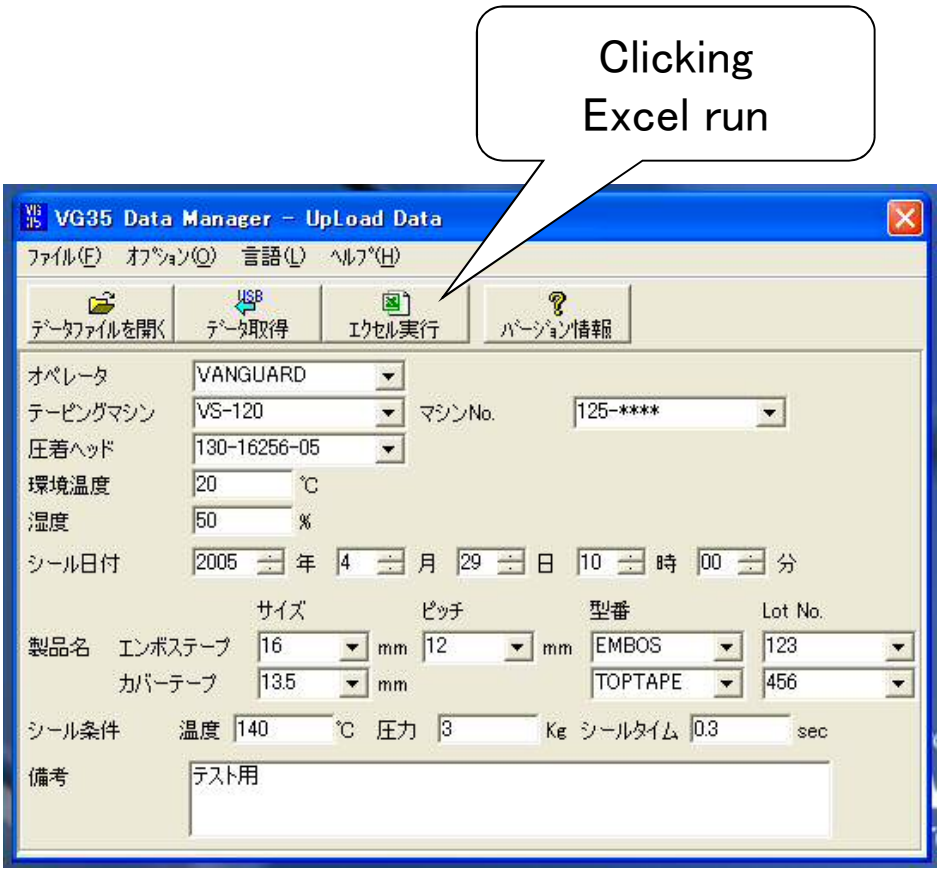

Starting “peel back force report”
Print, data saving,... is the same as EXCEL operation.

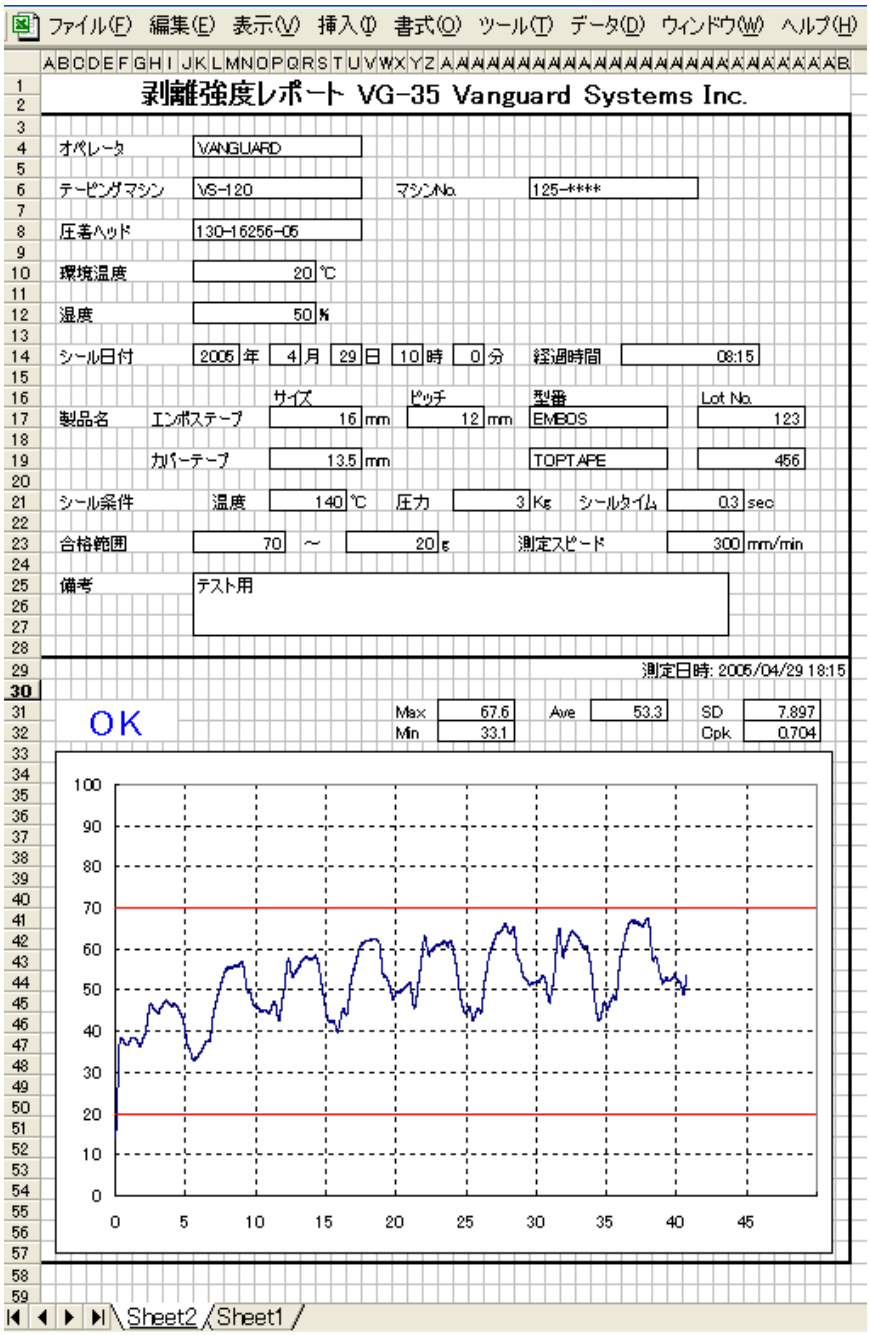

PROCEDURE OF CALIBRATION

Providing in-house calibration of VG-35 Peel Back Force Tester with calibration kit which is provided by Vanguard. This procedure shows how to make calibration using calibration kit.

1 TOOLS TO BE PREPARED

- VG-35 PEEL BACK FORCE TESTER
- CALIBRATION KIT (OPITON)
- DIGITAL VOLTMETER(VOLTAGE MEASUREMENT)
- SMALL DRIVER FOR ADJUSMENT

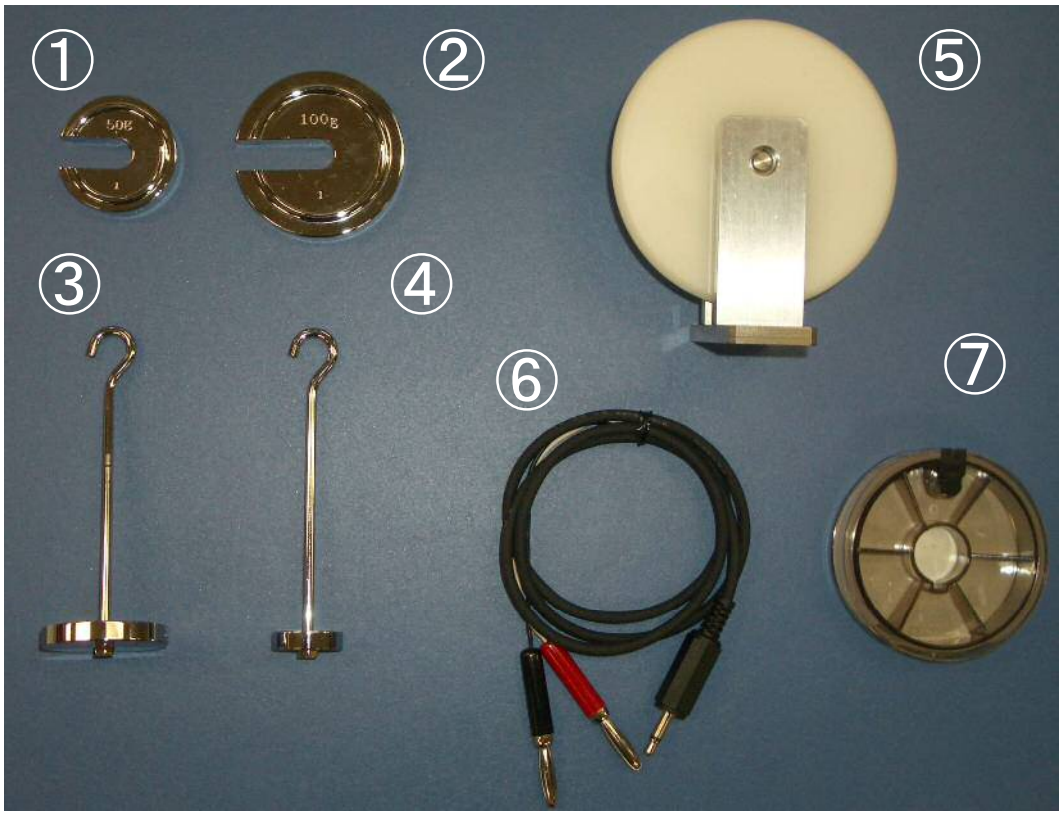

①50g Weight
②100g Weight
③50g Weight w/Hook
④20g Weight w/Hook
⑤Roller
⑥Output Cable
⑦Weight Fixing Line

2 PREPARATION

2－1 FIXING THE ROLLER

SIDE VIEW

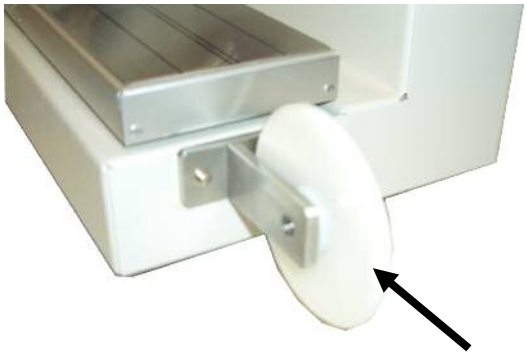

FIX THE ROLLER

2－2 How to fix a line to hang a weight

Preparing the line about 70 cm

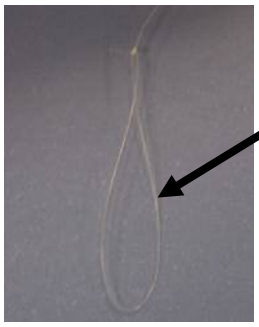

MAKE A LOOP AT ONE END OF LINE

Make a loop for easy hanging of weight

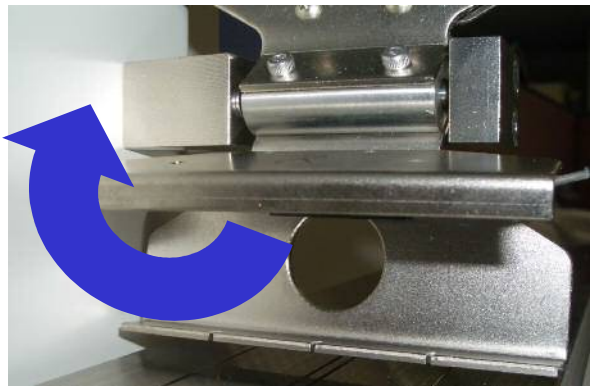

Set the other end of the line to a Large Clip.
※The setting method is same as setting the cover tape.

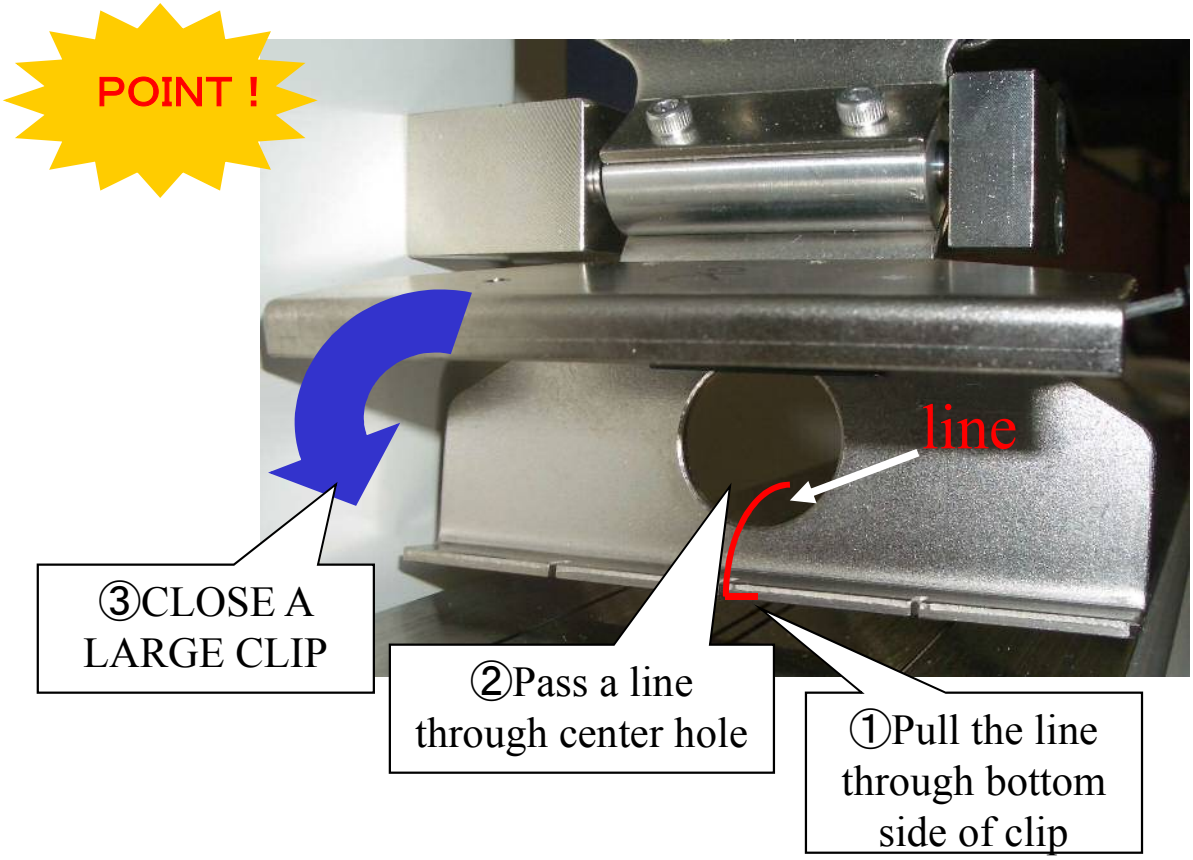
POINT !
line
③CLOSE A LARGE CLIP
②Pass a line through center hole
①Pull the line through bottom side of clip

Side View

ロードセル反転機構への衝撃厳禁
PLEASE BE CAREFUL HANDLING
BALANCE UNIT OF LOAD CELL
Line
Be sure to pass the line under the clip

2－3 CONNECTION TO DIGITAL VOLTMETER

Connect Output Cable to Output Jack for Chart Recorder located at the side of the Tester and the other end of the cable to DIGITAL VOLTMETER as illustrated below.

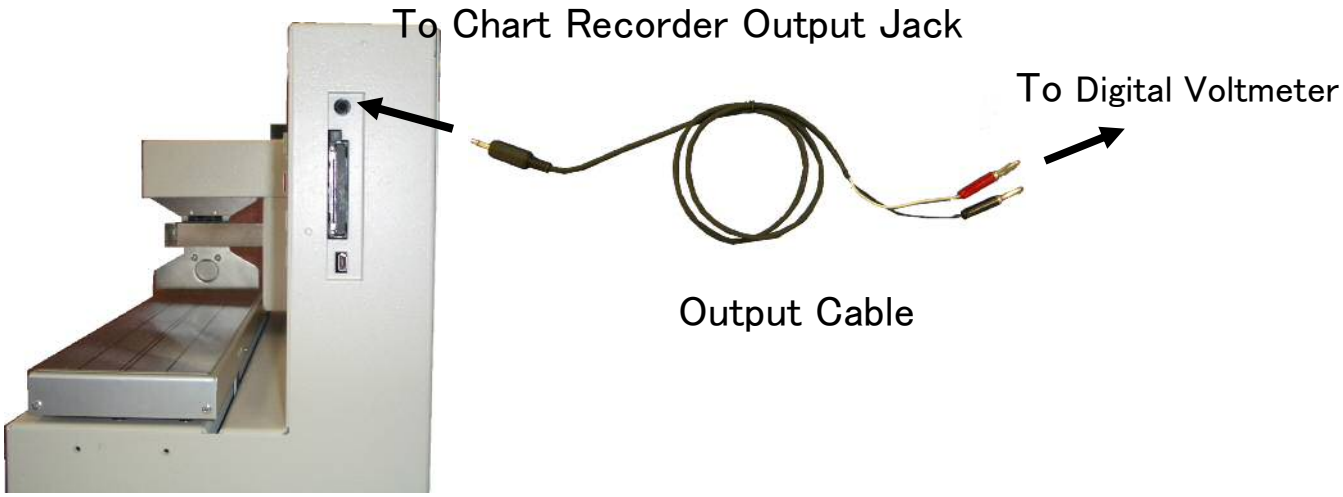

Now, ready for calibration !

3 MEASUREMENT TABLE

LOADCELL CALIBRATION FULL SCALE 10V.

TEST ITEMS	TOLERANCE %	STANDARD OUTPUT RANGE
0g	± (0. 3)	−0. 03 ~ 0. 03 V
20g	± (0. 2)	0. 98 ~ 1. 02 V
50g	± (0. 2)	2. 48 ~ 2. 52 V
100g	± (0. 2)	4. 98 ~ 5. 02 V
200g	± (0. 2)	9. 98 ~ 10. 02 V

MEASUREMENT OF OUTPUT VOLTAGE BY DIGITAL VOLTMETER.
THE MEASUREMENT WITHIN ABOVE RANGE IS ACCEPTABLE.

LCD DISPLAY MEASUREMENT FULL SCALE 200g

TEST ITEMS	TOLERANCE %	STANDARD OUTPUT RANGE
0g	± (0. 2)	−0. 4 ~ 0. 4 g
20g	± (0. 2)	19. 6 ~ 20. 4 g
50g	± (0. 2)	49. 6 ~ 50. 4 g
100g	± (0. 2)	99. 6 ~ 100. 4 g
200g	± (0. 2)	199. 6 ~ 200. 4 g

CONFIRMING DISPLAYED VALUE ON LCD.
THE MEASUREMENT WITHIN ABOVE RANGE IS ACCEPTABLE.

4 CONFIRMING METHOD

4－1 INSPECTION WITHOUT LOAD WEIGHT

This is to confirm without load weight.
Confirm 0 V. on DVM, 0g at LCD Display.
This is Ø-Adjustment..(As to PASS range, please refer to 3. MEASUREMENT TABLE.)

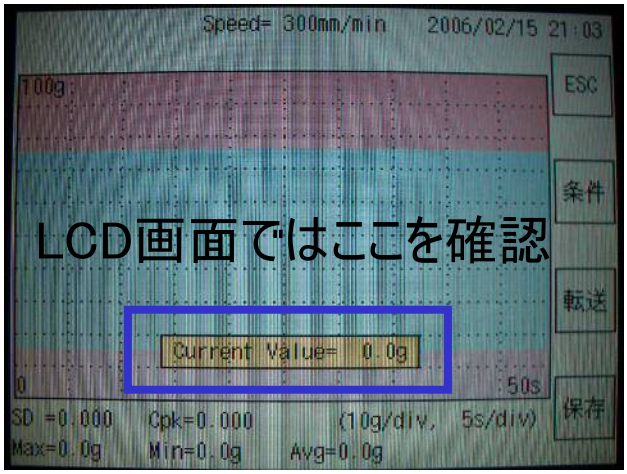

4－2 ADJUSTMENT METHOD

It is necessary to adjust the LOAD CELL, when the measurement value is out of PASS RANGE.

LOAD CELL

Remove the cap and you find a trimmer for adjustment.

Turn the trimmer “ZERO” so that the value comes into the PASS AREA.

BLUE CONTROL ・・・ ROUGH ADJUSTMENT

YELLOW CONTROL・・・ FINE ADJUSTMENT

When the value comes into PASS RANGE, the adjustment without load weight is finished.

4－3 MEASUREMENT USING WEIGHT

Hang the weight as shown above.
As described under 3 MEASUREMENT TABLE, execute voltage measurement and confirm value using each listed weight

・COMBINATION OF WEIGHT

20g → 20g Weight with Hook
50g → 50g Weight with Hook
100g → 50g Weight with hook+50g weight
200g → 50g Weight with Hook +50g Weight + 100g Weight

ADJUST THE SPAN TRIMMER WHEN MEASUREMENT VALUE IS OUT OF PASS RANGE.

BLUE CONTROL ・・・ ROUGH ADJUSTMENT
YELLOW CONTROL ・・・FINE ADJUSTMENT

POINT !

For example, even if 50g is passed, you need span calibration when 100g is out of range. The next step is, you must confirm and re-calibrate for 50g and you confirm again back to 100g.
Proceeding the other weight, step calibration as same as above repeatedly.

4－4 COMPLETION OF CALIBRATION

If you have finished all the measuring items listed , and can finally confirm 0V, 0g without load, then, the calibration work has been finished.